The Heath LN Parasol

One of the more popular homebuilts of the late '20s and early '30s was the Heath Parasol. Designed by Ed Heath, the Parasol was an extremely low cost airplane for its day — the total kit at one time sold for approximately $200.00.

The Heath Parasol was usually powered by the Heath conversion of the Henderson four cylinder motorcycle engine. Many later models used the Continental A-40. The Heath had a reputation as an excellent short field performer, getting in and out of small fields with ease. Full span ailerons made lateral control easy at all speeds and the comparatively large rudder and elevators not only made slow flight easy, but the controls were balanced and of equal response.

Beginning this month with the fuselage, we are reproducing the plans for the Heath LN Parasol. Over the next three months, we'll bring you the complete set of plans for this handsome single place airplane. Again, the purpose of presenting these drawings is not necessarily to encourage the construction of this model, but rather to serve as a method of comparison and education.

The Heath pictured here was donated to the EAA Aviation Foundation by Gary Rudolph (EAA 189784) of Vincennes, Indiana. This 1932 Model Heath was named Outstanding Silver Age Antique at Oshkosh '85 and Reserve Grand Champion Antique at Oshkosh '86.

Jim Koepnick

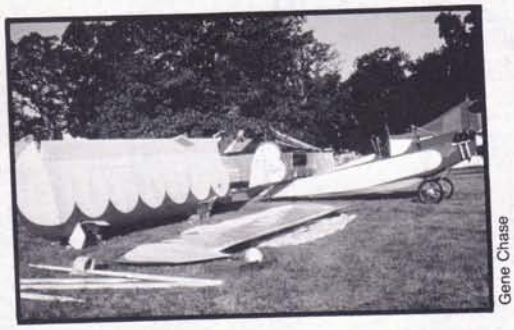

Gene Chase

Photo Layout by Jim Koepnick

EAA EXPERIMENTER	
PLAN 2	AIRCRAFT PLANS
HEATH LN PARASOL	

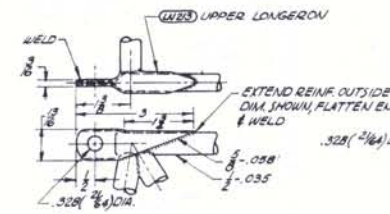

DETAIL #1 AT PANEL POINT 1U ENGINE MOUNT CONNECTION
SCALE: 1/2 SIZE

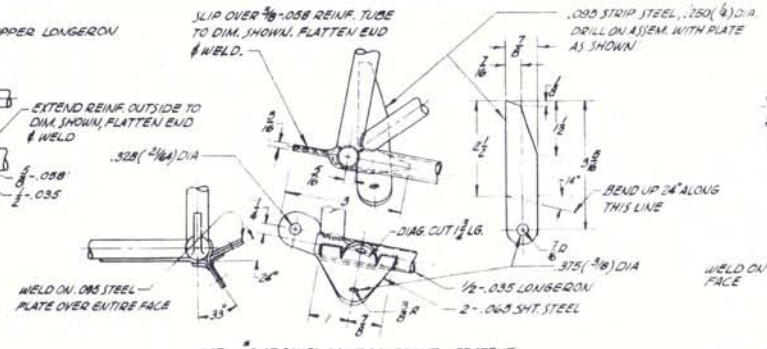

DETAIL #2 AT PANEL POINT 1L, FRONT LIFT STRUT & UNDERCARRIAGE FITTING. LEFT SIDE SHOWN
SCALE: 1/2 SIZE

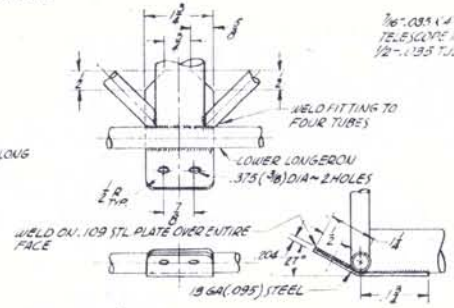

DETAIL #3 PANEL POINT 3L, REAR LIFT STRUT FITTING. SCALE: 1/2 SIZE

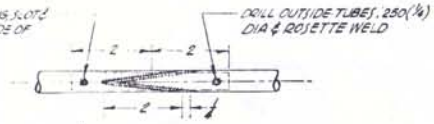

DETAIL #4 LOWER LONGERON SPLICE TYPICAL STA. 2L & 3L.
SCALE: 1/2 SIZE

DETAIL #5 UPPER LONGERON SPLICE STA. 4U & 7U SCALE: 1/2 SIZE

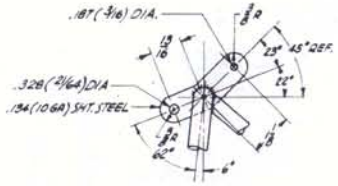

DETAIL #6 CENTER CABANE STRUT LUG
SCALE: 1/2 SIZE

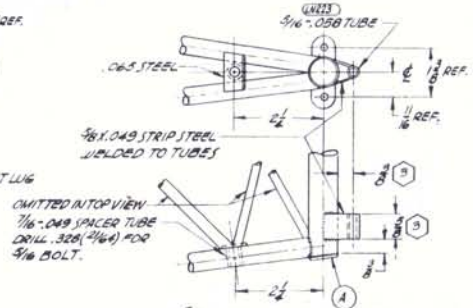

DETAIL #7 LOWER STERN POST FITTINGS
SCALE: 1/2 SIZE

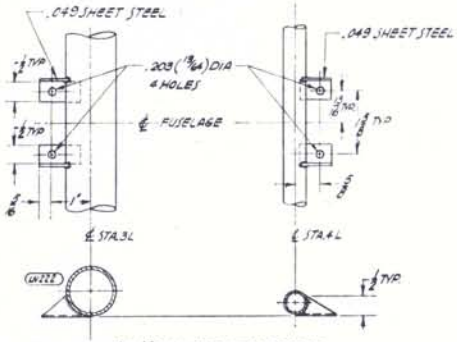

DETAILS #8 & #9 CONTROL STICK BEARING BRACKETS SCALE: 1/2 SIZE

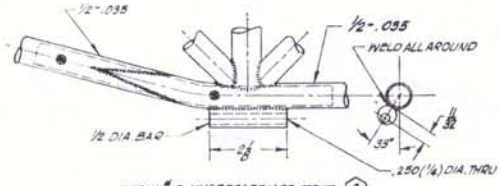

DETAIL #10 UNDERCARRIAGE STRUT CONNECTION AT PANEL POINT 2L (2)
SCALE: 1/2 SIZE

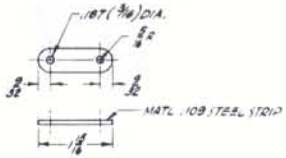

DETAIL "A" TAILSKID MT'G BRACKET
SCALE: 1/2 SIZE

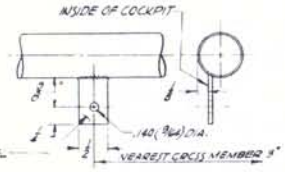

DETAIL #12 LUGS FOR WOOD STRIPS AT COCKPIT
SCALE: FULL SIZE

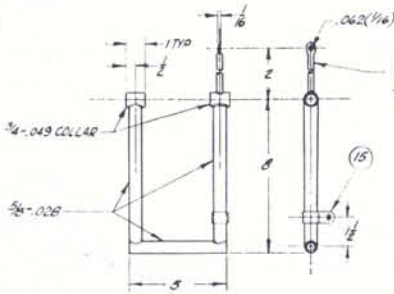

DETAIL #13 RUDDER PEDALS - 2 REQ'D
SCALE: 1/4 SIZE

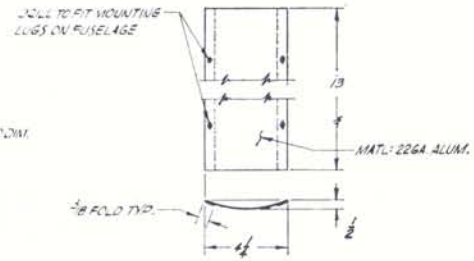

DETAIL #14 HEEL PLATE ~ 2 REQ'D.
SCALE: 1/4 SIZE

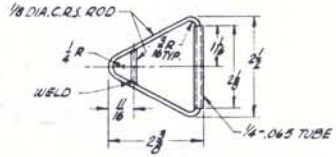

DETAIL #11 SAFETY BELT CONNECTION
SCALE: 1/2 SIZE

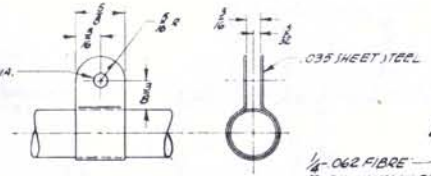

DETAIL #15 RUDDER CABLE LUG ~ 2 REQ'D
SCALE: FULL SIZE

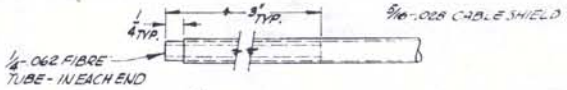

DETAIL #16 RUDDER CABLE FAIRLEAD ASSEM.
SCALE: FULL SIZE

(3) THESE DIMS. TYP. FOR UPPER STERNPOST HINGE FITTINGS.
(2) REINF. TUBE LONGER AT THIS POINT SO AS TO STRENGTHEN STRUT POINT.

NOTES:
1. ALL MATERIAL SAE 1018 MILD STEEL EXCEPT MEMBERS MARKED C.M. WHICH ARE SAE 4130.

HEATH AIRCRAFT CORPORATION NILES, MICHIGAN	
DWG. NO. 201	FUSELAGE DETAILS
SCALE: 1/2 & NOTED	MODEL LNB-4 · DRAWN: LINDY 12/10/31 · CHECKED CEL
REVISED & REDRAWN: R LAMBERT 11/12/37	

12 JUNE 1987

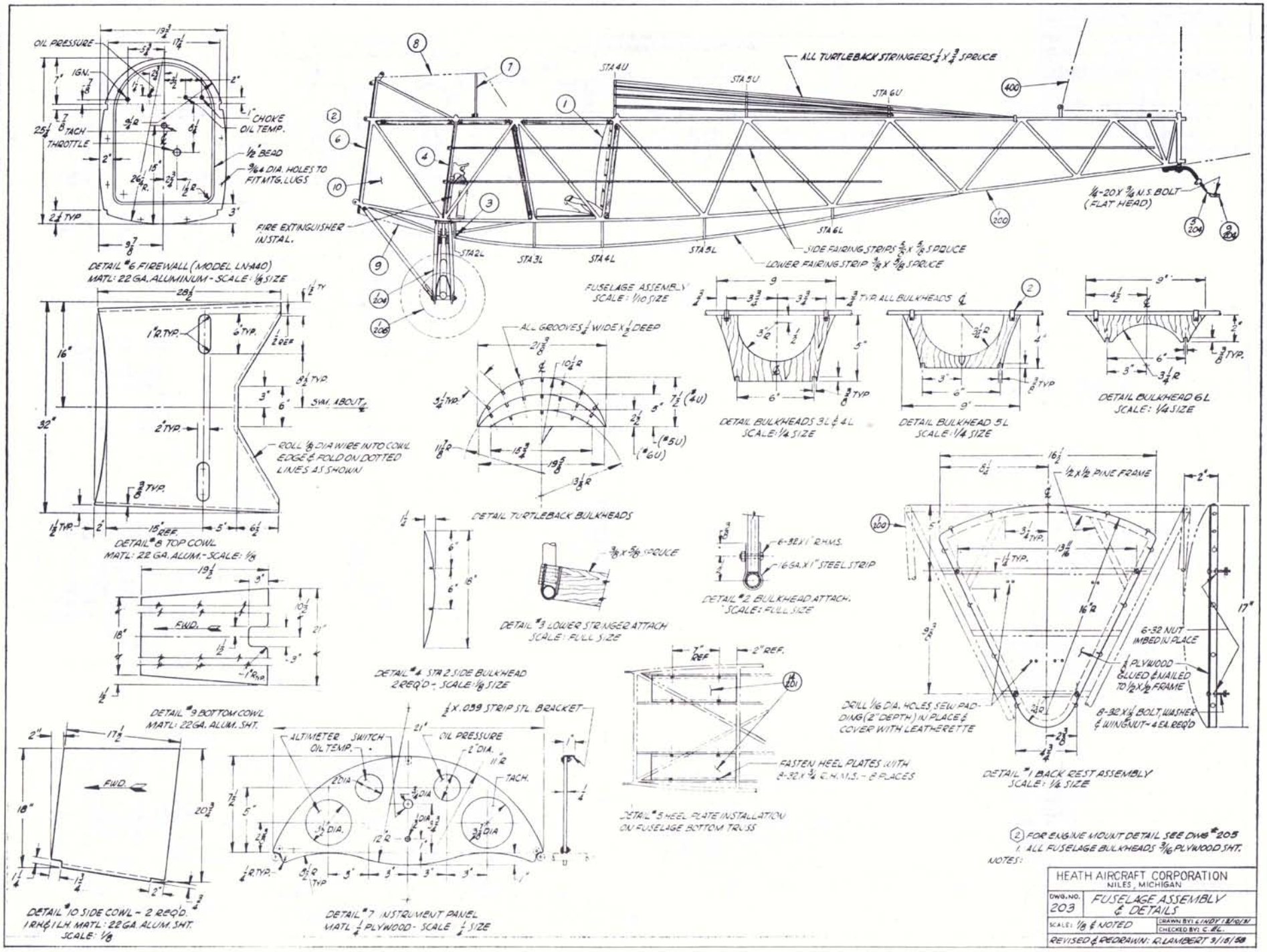
OIL PRESSURE
IGN.
TACH
THROTTLE
CHOKE
OIL TEMP.
1/2" BEAD
3/16 DIA. HOLES TO FIT MTG. LUGS
DETAIL #6 FIREWALL (MODEL LN-440)
MATL: 22 GA. ALUMINUM - SCALE: 1/8 SIZE
ALL TURTLEBACK STRINGERS 1/4 X 3/4 SPRUCE
STA 4U
STA 5U
STA 6U
STA 2L
STA 3L
STA 4L
STA 5L
STA 6L
FIRE EXTINGUISHER INSTAL.
SIDE FAIRING STRIPS 3/8 X 5/16 SPRUCE
LOWER FAIRING STRIP 3/8 X 5/16 SPRUCE
1/4-20 X 3/4 N.S. BOLT (FLAT HEAD)
FUSELAGE ASSEMBLY SCALE: 1/10 SIZE
DETAIL #8 TOP COWL
MATL: 22 GA. ALUM. - SCALE: 1/8
ROLL 1/8 DIA WIRE INTO COWL EDGE & FOLD ON DOTTED LINES AS SHOWN
ALL GROOVES 1/4 WIDE X 1/2 DEEP
DETAIL TURTLEBACK BULKHEADS
DETAIL BULKHEADS 3L & 4L SCALE: 1/4 SIZE
TYP. ALL BULKHEADS
DETAIL BULKHEAD 5L SCALE: 1/4 SIZE
DETAIL BULKHEAD 6L SCALE: 1/4 SIZE
1/2 X 1/2 PINE FRAME
DETAIL #2 BULKHEAD ATTACH. SCALE: FULL SIZE
6-32 X 1" R.H.M.S.
16 GA. X 1" STEEL STRIP
3/8 X 5/8 SPRUCE
DETAIL #3 LOWER STRINGER ATTACH SCALE: FULL SIZE
DETAIL #4 STA 2 SIDE BULKHEAD 2 REQ'D - SCALE: 1/8 SIZE
DETAIL #9 BOTTOM COWL
MATL: 22 GA. ALUM. SHT.
1/4 X .039 STRIP STL. BRACKET
ALTIMETER
SWITCH
OIL TEMP.
OIL PRESSURE
TACH.
DETAIL #7 INSTRUMENT PANEL
MATL 1/4 PLYWOOD - SCALE 1/4 SIZE
DETAIL #5 HEEL PLATE INSTALLATION ON FUSELAGE BOTTOM TRUSS
FASTEN HEEL PLATES WITH 8-32 X 3/4 C.H.M.S. - 8 PLACES
DRILL 1/16 DIA. HOLES SEW PADDING (2" DEPTH) IN PLACE & COVER WITH LEATHERETTE
6-32 NUT IMBED IN PLACE
1/4 PLYWOOD GLUED & NAILED TO 1/2 X 1/2 FRAME
8-32 X 1/2 BOLT, WASHER & WINGNUT - 4 EA. REQ'D
DETAIL #1 BACK REST ASSEMBLY SCALE: 1/4 SIZE
DETAIL #10 SIDE COWL - 2 REQ'D. 1 RH & 1 LH. MATL: 22 GA. ALUM. SHT. SCALE: 1/8
FWD.
NOTES:
1. ALL FUSELAGE BULKHEADS 3/16 PLYWOOD SHT.
2. FOR ENGINE MOUNT DETAIL SEE DWG #205
HEATH AIRCRAFT CORPORATION
NILES, MICHIGAN
DWG. NO. 203
FUSELAGE ASSEMBLY & DETAILS
SCALE: 1/8 & NOTED
DRAWN BY: LINDY 12/10/37
CHECKED BY: C. BL.
REVISED & REDRAWN: R. LAMBERT 9/18/50

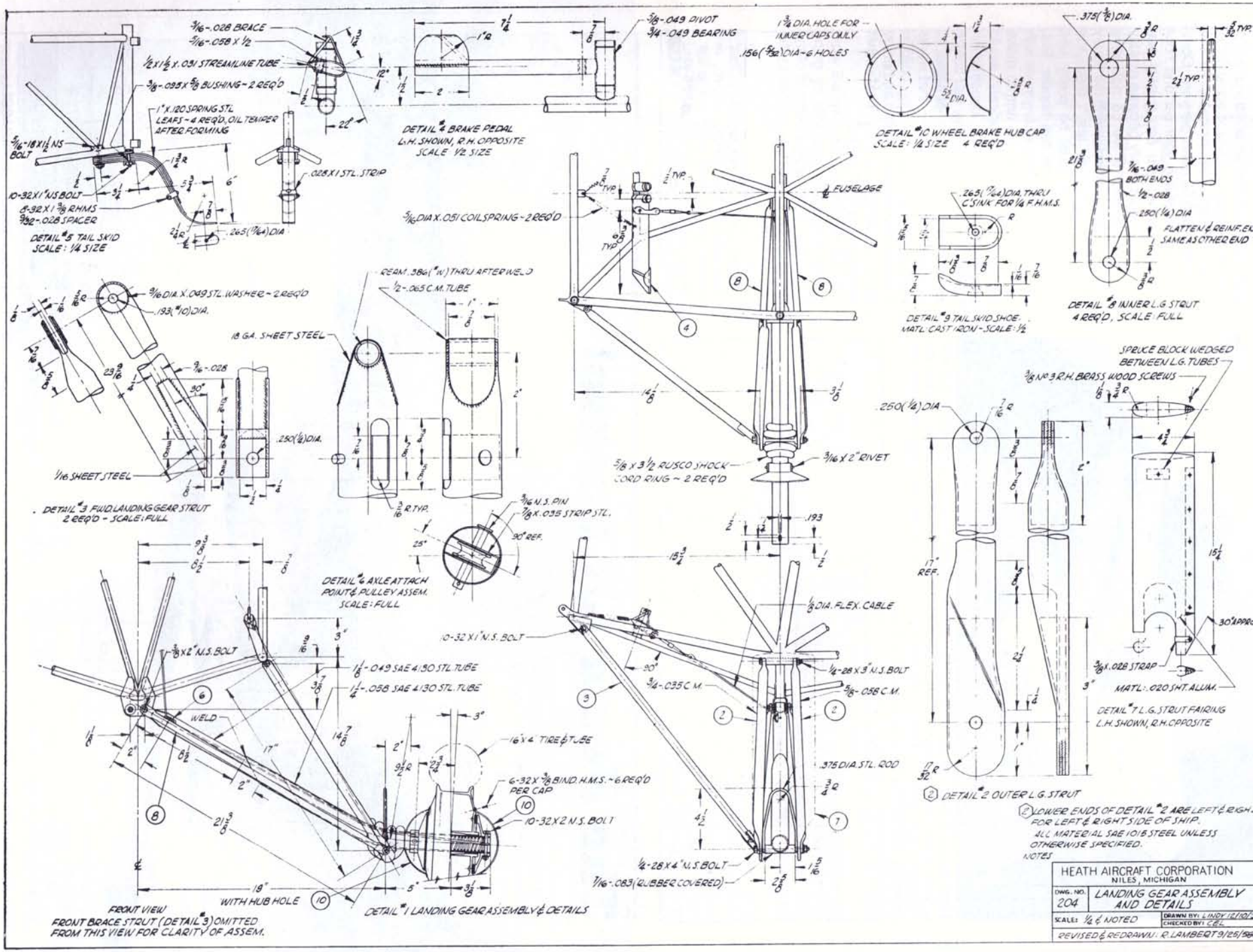
3/16-.028 BRACE
5/16-.058 X 1/2
1/2 X 1/2 X .031 STREAMLINE TUBE
3/8-.035 X 5/8 BUSHING-2 REQ'D
1" X .120 SPRING STL LEAFS-4 REQ'D, OIL TEMPER AFTER FORMING
5/16-18 X 1/2 N.S. BOLT
10-32 X 1" N.S. BOLT
8-32 X 1 3/8 RHMS
9/32-.028 SPACER
.028 X 1 STL. STRIP
.265 (17/64) DIA
DETAIL #5 TAIL SKID
SCALE: 1/4 SIZE
5/8-.049 DIVOT
3/4-.049 BEARING
DETAIL #4 BRAKE PEDAL
L.H. SHOWN, R.H. OPPOSITE
SCALE 1/2 SIZE
1 3/4 DIA. HOLE FOR INNER CAPS ONLY
.156 (5/32) DIA-6 HOLES
DETAIL #10 WHEEL BRAKE HUB CAP
SCALE: 1/4 SIZE 4 REQ'D
.375 (3/8) DIA.
5/32 TYP.
2 1/4 TYP.
7/16-.049 BOTH ENDS
1/2-.028
.250 (1/4) DIA
FLATTEN & REINF. END SAME AS OTHER END
DETAIL #8 INNER L.G. STRUT
4 REQ'D, SCALE: FULL
5/16 DIA X .051 COILSPRING-2 REQ'D
FUSELAGE
.265 (17/64) DIA. THRU C'SINK FOR 1/4 F.H.M.S.
DETAIL #9 TAIL SKID SHOE
MATL CAST IRON-SCALE: 1/2
3/16 DIA. X .049 STL. WASHER-2 REQ'D
.193 (#10) DIA.
18 GA. SHEET STEEL
1/16 SHEET STEEL
.250 (1/4) DIA.
DETAIL #3 FWD LANDING GEAR STRUT
2 REQ'D-SCALE: FULL
REAM .384 (#11) THRU AFTER WELD
1/2-.065 C.M. TUBE
3/16 R. TYP.
DETAIL #6 AXLE ATTACH POINT & PULLEY ASSEM.
SCALE: FULL
3/16 N.S. PIN
7/8 X .035 STRIP STL.
90° REF.
5/8 X 3 1/2 RUSCO SHOCK CORD RING-2 REQ'D
3/16 X 2" RIVET
1/8 DIA. FLEX. CABLE
10-32 X 1" N.S. BOLT
1/4-28 X 3/4" N.S. BOLT
3/4-.035 C.M.
5/8-.058 C.M.
.375 DIA. STL. ROD
1/4-28 X 4" N.S. BOLT
7/16-.083 (RUBBER COVERED)
SPRUCE BLOCK WEDGED BETWEEN L.G. TUBES
3/8 No 3 R.H. BRASS WOOD SCREWS
.250 (1/4) DIA
3/8 X .028 STRAP
MATL .020 SHT. ALUM.
DETAIL #7 L.G. STRUT FAIRING
L.H. SHOWN, R.H. OPPOSITE
DETAIL #2 OUTER L.G. STRUT
3/8 X 2" N.S. BOLT
1 1/8-.049 SAE 4130 STL. TUBE
1 1/4-.058 SAE 4130 STL. TUBE
WELD
16" X 4" TIRE & TUBE
6-32 X 3/8 BIND. H.M.S.-6 REQ'D PER CAP
10-32 X 2 N.S. BOLT
19" WITH HUB HOLE
FRONT VIEW
FRONT BRACE STRUT (DETAIL #3) OMITTED FROM THIS VIEW FOR CLARITY OF ASSEM.
DETAIL #1 LANDING GEAR ASSEMBLY & DETAILS
LOWER ENDS OF DETAIL #2 ARE LEFT & RIGHT FOR LEFT & RIGHT SIDE OF SHIP.
ALL MATERIAL SAE 1018 STEEL UNLESS OTHERWISE SPECIFIED.
NOTES
HEATH AIRCRAFT CORPORATION
NILES, MICHIGAN
DWG. NO. 204
LANDING GEAR ASSEMBLY AND DETAILS
SCALE: 1/4 & NOTED
DRAWN BY: LINDY 12/10/
CHECKED BY: CEL
REVISED & REDRAWN: R. LAMBERT 9/25/59

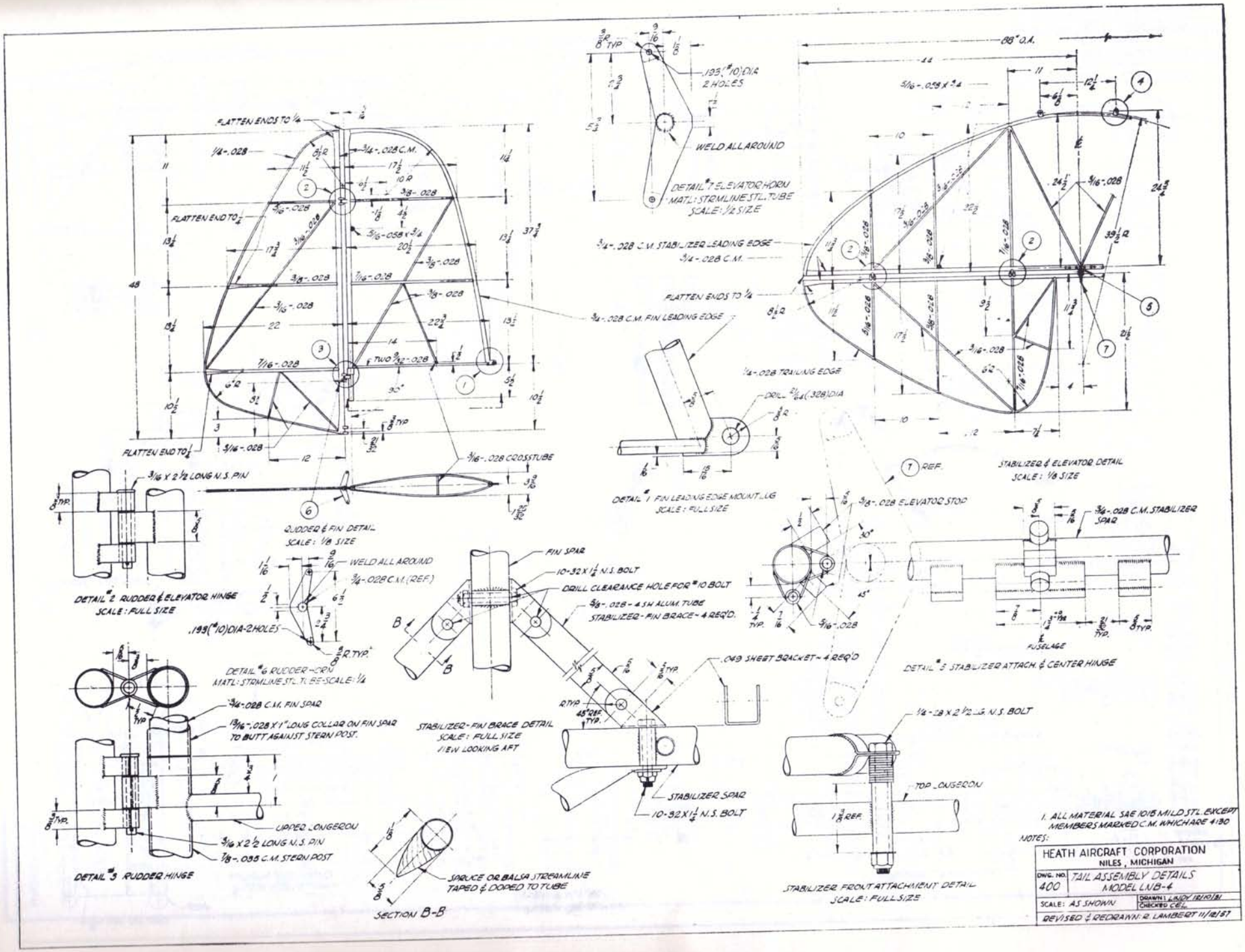
FLATTEN ENDS TO 1/4
1/4-.028
3/4-.028 C.M.
FLATTEN END TO 1/4
3/16-.028
3/8-.028
3/16-.058 X 3/4
7/16-.028
TWO 9/32-.028
3/16-.028 CROSSTUBE
RUDDER & FIN DETAIL
SCALE: 1/8 SIZE
3/16 X 2 1/2 LONG N.S. PIN
DETAIL #2 RUDDER & ELEVATOR HINGE
SCALE: FULL SIZE
WELD ALL AROUND
3/4-.028 C.M. (REF.)
.199(#10) DIA-2 HOLES
DETAIL #6 RUDDER-CRN
MATL: STRMLINE STL. TUBE-SCALE: 1/4
3/4-.028 C.M. FIN SPAR
13/16-.028 X 1" LONG COLLAR ON FIN SPAR TO BUTT AGAINST STERN POST.
UPPER LONGERON
3/16 X 2 1/2 LONG N.S. PIN
7/8-.028 C.M. STERN POST
DETAIL #3 RUDDER HINGE
.199(#10) DIA 2 HOLES
WELD ALL AROUND
DETAIL #7 ELEVATOR HORN
MATL: STRMLINE STL. TUBE
SCALE: 1/2 SIZE
3/4-.028 C.M. STABILIZER LEADING EDGE
3/4-.028 C.M.
FLATTEN ENDS TO 1/4
3/4-.028 C.M. FIN LEADING EDGE
1/4-.028 TRAILING EDGE
DRILL 21/64 (.328) DIA
DETAIL #1 FIN LEADING EDGE MOUNT LUG
SCALE: FULL SIZE
FIN SPAR
10-32 X 1 1/2 N.S. BOLT
DRILL CLEARANCE HOLE FOR #10 BOLT
5/8-.028-4 SH ALUM. TUBE STABILIZER-FIN BRACE-4 REQ'D.
.049 SHEET BRACKET-4 REQ'D
STABILIZER-FIN BRACE DETAIL
SCALE: FULL SIZE
VIEW LOOKING AFT
STABILIZER SPAR
10-32 X 1 1/2 N.S. BOLT
SPRUCE OR BALSA STREAMLINE TAPED & DOPED TO TUBE
SECTION B-B
88" O.A.
44
11
3/16-.058 X 3/4
24 1/2
3/16-.028
39 1/2 R
7/16-.028
3/16-.028
STABILIZER & ELEVATOR DETAIL
SCALE: 1/8 SIZE
REF.
3/8-.028 ELEVATOR STOP
3/16-.028
3/4-.028 C.M. STABILIZER SPAR
FUSELAGE
DETAIL #5 STABILIZER ATTACH. & CENTER HINGE
1/4-28 X 2 1/2 LG. N.S. BOLT
TOP LONGERON
1 3/8 REF.
STABILIZER FRONT ATTACHMENT DETAIL
SCALE: FULL SIZE
NOTES:
1. ALL MATERIAL SAE 1015 MILD STL. EXCEPT MEMBERS MARKED C.M. WHICH ARE 4130
HEATH AIRCRAFT CORPORATION
NILES, MICHIGAN
DWG. NO. 400
TAIL ASSEMBLY DETAILS
MODEL LNB-4
SCALE: AS SHOWN
DRAWN: L. LAJOY 12/10/81
CHECKED: C.E.L.
REVISED & REDRAWN: R. LAMBERT 11/12/87

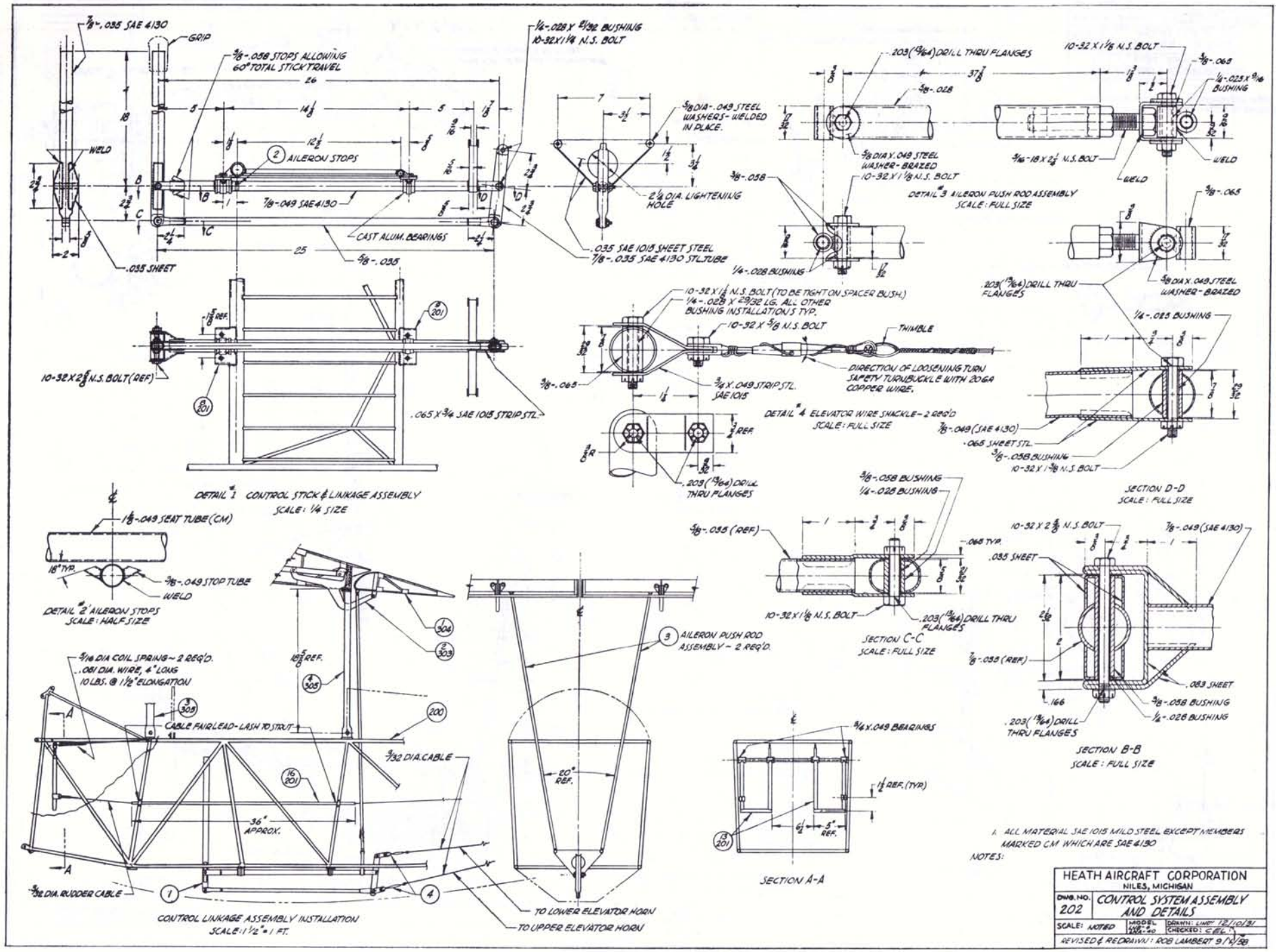
7/8"-.035 SAE 4130
GRIP
3/8"-.058 STOPS ALLOWING 60° TOTAL STICK TRAVEL
1/4"-.028 X 21/32 BUSHING 10-32 X 1 1/8 N.S. BOLT
26
18
5
14 1/8
12 1/2
WELD
2 AILERON STOPS
7/8"-.049 SAE 4130
CAST ALUM. BEARINGS
25
.035 SHEET
5/8"-.035
.035 SAE 1015 SHEET STEEL
7/8"-.035 SAE 4130 STL. TUBE
5/8 DIA.-.049 STEEL WASHERS-WELDED IN PLACE.
2 1/4 DIA. LIGHTENING HOLE
DETAIL #1 CONTROL STICK & LINKAGE ASSEMBLY
SCALE: 1/4 SIZE
10-32 X 2 5/8 N.S. BOLT (REF)
.065 X 3/4 SAE 1015 STRIP STL.
.203 (13/64) DRILL THRU FLANGES
3/8"-.058
10-32 X 1 1/8 N.S. BOLT
5/8 DIA. X .049 STEEL WASHER-BRAZED
1/4"-.028 BUSHING
DETAIL #3 AILERON PUSH ROD ASSEMBLY
SCALE: FULL SIZE
10-32 X 1 1/8 N.S. BOLT
3/8"-.068
1/4"-.025 X 9/16 BUSHING
3/16"-18 X 2 1/4 N.S. BOLT
WELD
3/8"-.065
.203 (13/64) DRILL THRU FLANGES
5/8 DIA. X .049 STEEL WASHER-BRAZED
10-32 X 1/2 N.S. BOLT (TO BE TIGHT ON SPACER BUSH.)
1/4"-.028 X 29/32 LG. ALL OTHER BUSHING INSTALLATIONS TYP.
10-32 X 5/8 N.S. BOLT
THIMBLE
DIRECTION OF LOOSENING TURN SAFETY TURNBUCKLE WITH 20 GA COPPER WIRE.
3/8"-.065
3/4 X .049 STRIP STL. SAE 1015
DETAIL #4 ELEVATOR WIRE SHACKLE-2 REQ'D
SCALE: FULL SIZE
.203 (13/64) DRILL THRU FLANGES
1/4"-.025 BUSHING
7/8"-.049 (SAE 4130)
.065 SHEET STL.
3/8"-.058 BUSHING
10-32 X 1 1/8 N.S. BOLT
SECTION D-D
SCALE: FULL SIZE
1 1/8"-.049 SEAT TUBE (CM)
18° TYP.
3/8"-.049 STOP TUBE
WELD
DETAIL #2 AILERON STOPS
SCALE: HALF SIZE
3/8"-.058 BUSHING
1/4"-.028 BUSHING
7/8"-.035 (REF)
.068 TYP.
10-32 X 1 1/8 N.S. BOLT
.203 (13/64) DRILL THRU FLANGES
SECTION C-C
SCALE: FULL SIZE
10-32 X 2 5/8 N.S. BOLT
7/8"-.049 (SAE 4130)
.035 SHEET
7/8"-.035 (REF)
.083 SHEET
3/8"-.058 BUSHING
1/4"-.028 BUSHING
.166
.203 (13/64) DRILL THRU FLANGES
SECTION B-B
SCALE: FULL SIZE
3/16 DIA COIL SPRING-2 REQ'D.
.081 DIA. WIRE, 4" LONG
10 LBS. @ 1 1/2" ELONGATION
CABLE FAIRLEAD-LASH TO STRUT
9/32 DIA. CABLE
36" APPROX.
3/32 DIA. RUDDER CABLE
3 AILERON PUSH ROD ASSEMBLY-2 REQ'D.
60° REF.
TO LOWER ELEVATOR HORN
TO UPPER ELEVATOR HORN
CONTROL LINKAGE ASSEMBLY INSTALLATION
SCALE: 1 1/2" = 1 FT.
3/8 X .049 BEARINGS
1 1/2 REF. (TYP.)
5" REF.
SECTION A-A
NOTES:
1. ALL MATERIAL SAE 1015 MILD STEEL EXCEPT MEMBERS MARKED CM WHICH ARE SAE 4130
HEATH AIRCRAFT CORPORATION
NILES, MICHIGAN
DWG. NO. 202
CONTROL SYSTEM ASSEMBLY AND DETAILS
SCALE: NOTED
MODEL 1928-40
DRAWN: LMT 12/10/31
CHECKED: C.E.C.
REVISED & REDRAWN: ROB LAMBERT 9/14/88

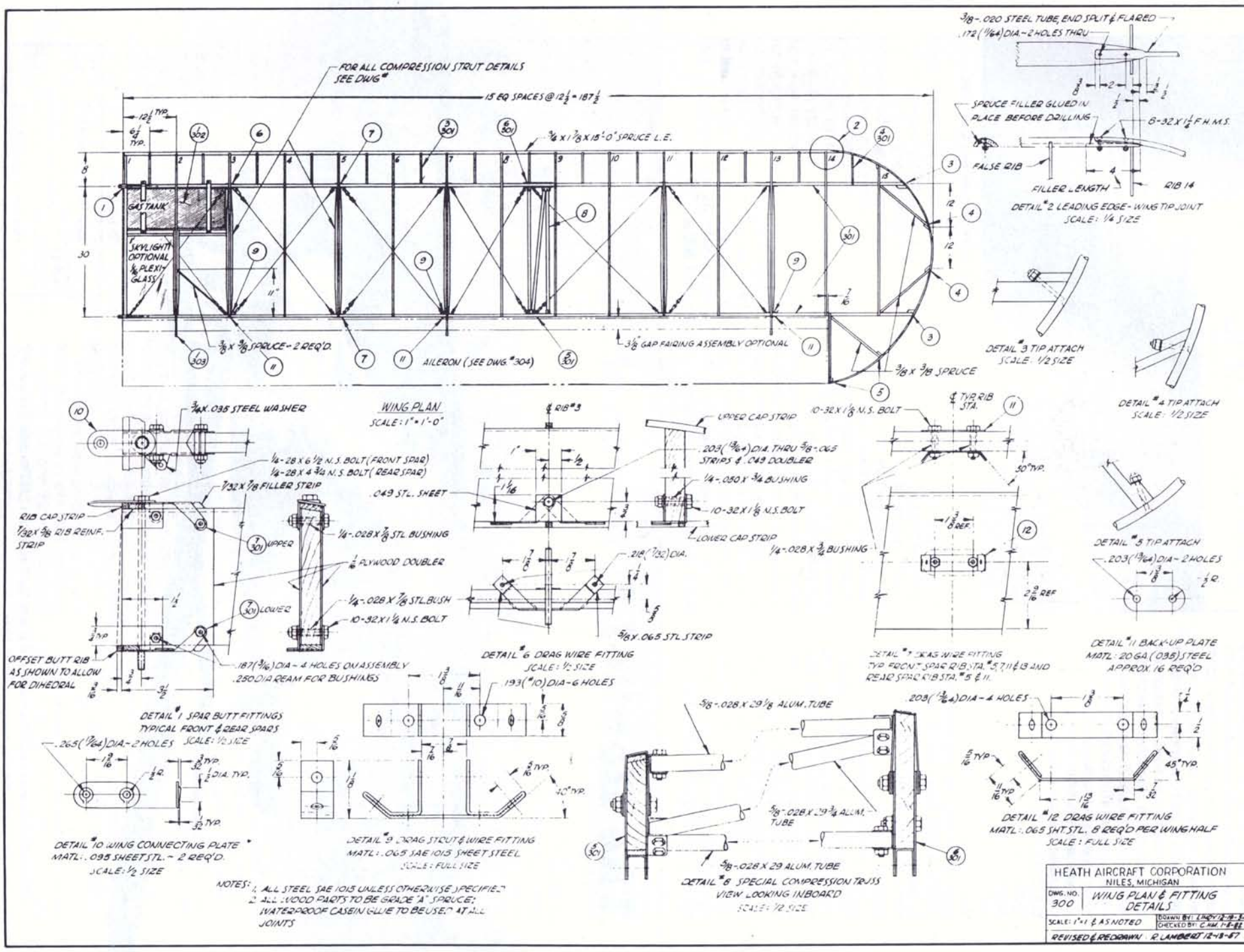
FOR ALL COMPRESSION STRUT DETAILS SEE DWG #
15 EQ SPACES @ 12½ = 187½
3/4 X 1 7/8 X 15'-0" SPRUCE L.E.
GAS TANK
SKYLIGHT OPTIONAL 1/8 PLEXI GLASS
3/8 X 3/8 SPRUCE - 2 REQ'D.
AILERON (SEE DWG. #304)
3 1/8" GAP FAIRING ASSEMBLY OPTIONAL
3/8 X 3/8 SPRUCE
WING PLAN
SCALE: 1" = 1'-0"
3/8 - .020 STEEL TUBE, END SPLIT & FLARED
.172 (11/64) DIA. - 2 HOLES THRU
SPRUCE FILLER GLUED IN PLACE BEFORE DRILLING
6-32 X 1/2 F.H.M.S.
FALSE RIB
FILLER LENGTH
RIB 14
DETAIL #2 LEADING EDGE - WING TIP JOINT
SCALE: 1/4 SIZE
DETAIL #3 TIP ATTACH
SCALE: 1/2 SIZE
DETAIL #4 TIP ATTACH
SCALE: 1/2 SIZE
3/4 X .035 STEEL WASHER
1/4 - 28 X 6 1/2 N.S. BOLT (FRONT SPAR)
1/4 - 28 X 4 3/4 N.S. BOLT (REAR SPAR)
7/32 X 7/8 FILLER STRIP
RIB CAP STRIP
7/32 X 5/8 RIB REINF. STRIP
UPPER
LOWER
1/4 - .028 X 7/8 STL. BUSHING
1/8 PLYWOOD DOUBLER
1/4 - .028 X 7/8 STL. BUSH
10-32 X 1 1/4 N.S. BOLT
OFFSET BUTT RIB AS SHOWN TO ALLOW FOR DIHEDRAL
.187 (3/16) DIA. - 4 HOLES ON ASSEMBLY
.250 DIA. REAM FOR BUSHINGS
DETAIL #1 SPAR BUTT FITTINGS TYPICAL FRONT & REAR SPARS
SCALE: 1/2 SIZE
℄ RIB #3
UPPER CAP STRIP
.203 (13/64) DIA. THRU 5/8 - .065 STRIPS & .049 DOUBLER
1/4 - .050 X 3/4 BUSHING
.049 STL. SHEET
10-32 X 1 1/8 N.S. BOLT
LOWER CAP STRIP
.218 (7/32) DIA.
5/8 X .065 STL. STRIP
DETAIL #6 DRAG WIRE FITTING
SCALE: 1/2 SIZE
10-32 X 1 1/8 N.S. BOLT
℄ TYP. RIB STA.
50° TYP.
1/4 - .028 X 3/4 BUSHING
DETAIL #7 DRAG WIRE FITTING
TYP. FRONT SPAR RIB STA. #5, 7, 11 & 13 AND REAR SPAR RIB STA. #5 & 11.
DETAIL #5 TIP ATTACH
.203 (13/64) DIA. - 2 HOLES
DETAIL #11 BACK-UP PLATE
MATL: 20 GA (.038) STEEL
APPROX. 16 REQ'D
.265 (17/64) DIA. - 2 HOLES
DETAIL #10 WING CONNECTING PLATE
MATL: .093 SHEET STL. - 2 REQ'D.
SCALE: 1/2 SIZE
.193 (#10) DIA. - 6 HOLES
45° TYP.
DETAIL #9 DRAG STRUT & WIRE FITTING
MATL: .065 SAE 1015 SHEET STEEL
SCALE: FULL SIZE
5/8 - .028 X 29 1/8 ALUM. TUBE
5/8 - .028 X 29 3/4 ALUM. TUBE
5/8 - .028 X 29 ALUM. TUBE
DETAIL #8 SPECIAL COMPRESSION TRUSS
VIEW LOOKING INBOARD
SCALE: 1/2 SIZE
.203 (13/64) DIA. - 4 HOLES
45° TYP.
DETAIL #12 DRAG WIRE FITTING
MATL: .065 SHT. STL. 8 REQ'D PER WING HALF
SCALE: FULL SIZE
NOTES: 1. ALL STEEL SAE 1015 UNLESS OTHERWISE SPECIFIED
2. ALL WOOD PARTS TO BE GRADE "A" SPRUCE; WATERPROOF CASEIN GLUE TO BE USED AT ALL JOINTS
HEATH AIRCRAFT CORPORATION
NILES, MICHIGAN
DWG. NO. 300
WING PLAN & FITTING DETAILS
SCALE: 1" = 1 & AS NOTED
DRAWN BY: L. McCRAY 12-9-87
CHECKED BY: C. AM. 12-12-87
REVISED & REDRAWN R. LAMBERT 12-18-87

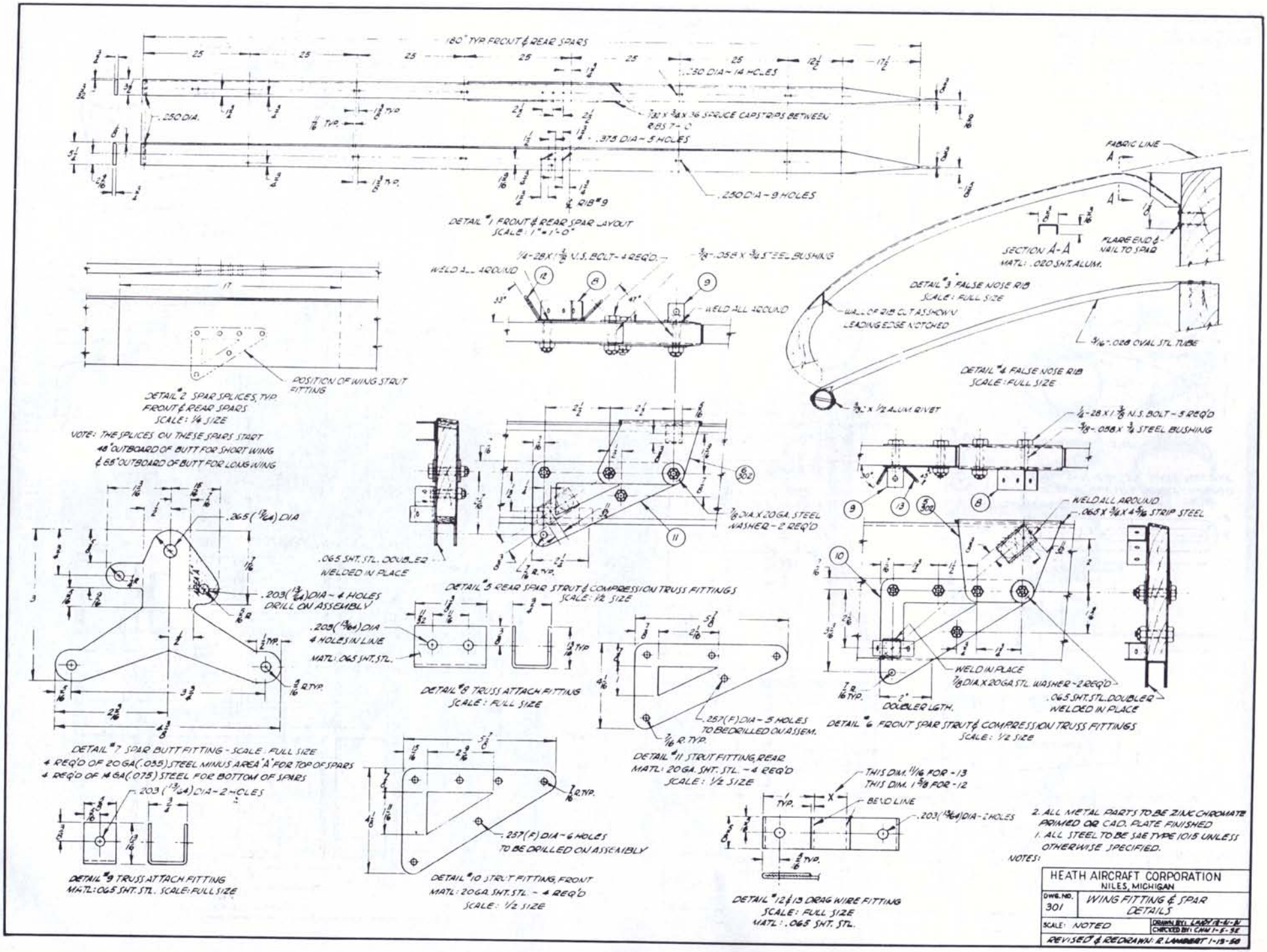
180" TYP. FRONT & REAR SPARS
.250 DIA.
.250 DIA - 14 HOLES
7/32 X 3/8 X 36 SPRUCE CAPSTRIPS BETWEEN RIBS 7 - 8
.375 DIA - 5 HOLES
.250 DIA - 9 HOLES
RIB #9
DETAIL #1 FRONT & REAR SPAR LAYOUT
SCALE: 1" = 1'-0"
POSITION OF WING STRUT FITTING
DETAIL #2 SPAR SPLICES, TYP. FRONT & REAR SPARS
SCALE: 1/4 SIZE
NOTE: THE SPLICES ON THESE SPARS START 48" OUTBOARD OF BUTT FOR SHORT WING & 68" OUTBOARD OF BUTT FOR LONG WING
1/4-28 X 1 1/2 N.S. BOLT - 4 REQ'D.
3/8 - .058 X 3/4 STEEL BUSHING
WELD ALL AROUND
WELD ALL AROUND
.265 (17/64) DIA
.203 (13/64) DIA - 4 HOLES DRILL ON ASSEMBLY
.065 SHT. STL. DOUBLER WELDED IN PLACE
7/8 DIA. X 20 GA. STEEL WASHER - 2 REQ'D
DETAIL #5 REAR SPAR STRUT & COMPRESSION TRUSS FITTINGS
SCALE: 1/2 SIZE
.203 (13/64) DIA 4 HOLES IN LINE
MATL: .065 SHT. STL.
DETAIL #8 TRUSS ATTACH FITTING
SCALE: FULL SIZE
.257 (F) DIA - 5 HOLES TO BE DRILLED ON ASSEM.
DETAIL #11 STRUT FITTING, REAR
MATL: 20 GA. SHT. STL. - 4 REQ'D
SCALE: 1/2 SIZE
DETAIL #7 SPAR BUTT FITTING - SCALE: FULL SIZE
4 REQ'D OF 20 GA (.035) STEEL MINUS AREA 'A' FOR TOP OF SPARS
4 REQ'D OF 14 GA (.075) STEEL FOR BOTTOM OF SPARS
.203 (13/64) DIA - 2 HOLES
DETAIL #9 TRUSS ATTACH FITTING
MATL: .065 SHT. STL. SCALE: FULL SIZE
.257 (F) DIA - 6 HOLES TO BE DRILLED ON ASSEMBLY
DETAIL #10 STRUT FITTING, FRONT
MATL: 20 GA. SHT. STL. - 4 REQ'D
SCALE: 1/2 SIZE
FABRIC LINE
SECTION A-A
MATL: .020 SHT. ALUM.
FLARE END & NAIL TO SPAR
DETAIL #3 FALSE NOSE RIB
SCALE: FULL SIZE
WALL OF RIB CUT AS SHOWN
LEADING EDGE NOTCHED
3/16 - .028 OVAL STL. TUBE
DETAIL #4 FALSE NOSE RIB
SCALE: FULL SIZE
3/32 X 1/2 ALUM. RIVET
1/4-28 X 1 3/8 N.S. BOLT - 5 REQ'D
3/8 - .058 X 3/4 STEEL BUSHING
WELD ALL AROUND
.065 X 3/4 X 4 5/16 STRIP STEEL
WELD IN PLACE
7/8 DIA. X 20 GA. STL. WASHER - 2 REQ'D
.065 SHT. STL. DOUBLER WELDED IN PLACE
DOUBLER LGTH.
DETAIL #6 FRONT SPAR STRUT & COMPRESSION TRUSS FITTINGS
SCALE: 1/2 SIZE
THIS DIM. 11/16 FOR - 13
THIS DIM. 1 5/8 FOR - 12
BEND LINE
.203 (13/64) DIA - 2 HOLES
DETAIL #12 & 13 DRAG WIRE FITTING
SCALE: FULL SIZE
MATL: .065 SHT. STL.
NOTES:
2. ALL METAL PARTS TO BE ZINC CHROMATE PRIMED OR CAD. PLATE FINISHED
1. ALL STEEL TO BE SAE TYPE 1015 UNLESS OTHERWISE SPECIFIED.
HEATH AIRCRAFT CORPORATION
NILES, MICHIGAN
DWG. NO. 301
WING FITTING & SPAR DETAILS
SCALE: NOTED
DRAWN BY: LADY 12-6-50
CHECKED BY: CHW 1-5-51
REVISED & REDRAWN: R. LAMBERT 1-15-50

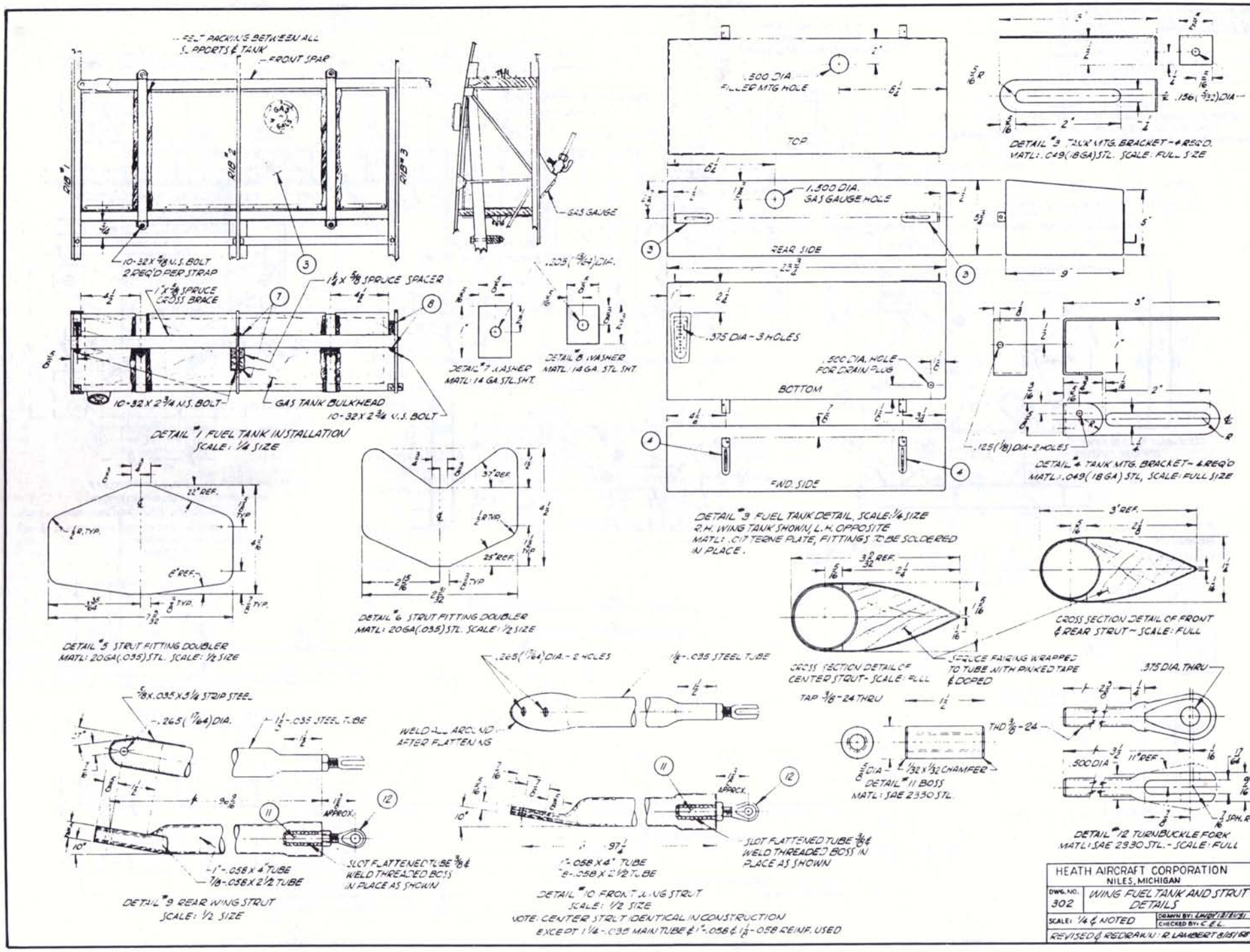
"FELT" PACKING BETWEEN ALL SUPPORTS & TANK
FRONT SPAR
RIB #1
RIB #2
RIB #3
GAS GAUGE
10-32 X 5/8 N.S. BOLT 2 REQ'D PER STRAP
1 1/2 X 5/8 SPRUCE SPACER
1" X 5/8 SPRUCE CROSS BRACE
10-32 X 2 3/4 N.S. BOLT
GAS TANK BULKHEAD
10-32 X 2 3/4 N.S. BOLT
DETAIL #1 FUEL TANK INSTALLATION
SCALE: 1/4 SIZE
.203 (13/64) DIA.
DETAIL #7 WASHER
MATL: 14 GA. STL. SHT.
DETAIL #8 WASHER
MATL: 14 GA. STL. SHT.
.500 DIA FILLER MTG HOLE
TOP
1.500 DIA. GAS GAUGE HOLE
REAR SIDE
.375 DIA - 3 HOLES
.500 DIA. HOLE FOR DRAIN PLUG
BOTTOM
END SIDE
DETAIL #3 FUEL TANK DETAIL, SCALE: 1/4 SIZE
R.H. WING TANK SHOWN, L.H. OPPOSITE
MATL: .017 TERNE PLATE, FITTINGS TO BE SOLDERED IN PLACE.
.156 (5/32) DIA
DETAIL #3 TANK MTG. BRACKET - 4 REQ'D.
MATL: .049 (18 GA) STL. SCALE: FULL SIZE
.125 (1/8) DIA - 2 HOLES
DETAIL #4 TANK MTG. BRACKET - 4 REQ'D
MATL: .049 (18 GA) STL, SCALE: FULL SIZE
DETAIL #5 STRUT FITTING DOUBLER
MATL: 20GA (.035) STL. SCALE: 1/2 SIZE
DETAIL #6 STRUT FITTING DOUBLER
MATL: 20GA (.035) STL. SCALE: 1/2 SIZE
CROSS SECTION DETAIL OF CENTER STRUT - SCALE: FULL
SPRUCE FAIRING WRAPPED TO TUBE WITH PINKED TAPE & DOPED
CROSS SECTION DETAIL OF FRONT & REAR STRUT - SCALE: FULL
TAP 3/8 - 24 THRU
THD 3/8 - 24
1/32 X 1/32 CHAMFER
DETAIL #11 BOSS
MATL: SAE 2330 STL.
.375 DIA. THRU
.500 DIA
DETAIL #12 TURNBUCKLE FORK
MATL: SAE 2330 STL. - SCALE: FULL
5/8 X .035 X 3 1/4 STRIP STEEL
.265 (17/64) DIA.
1 1/2 - .035 STEEL TUBE
SLOT FLATTENED TUBE 3/8 & WELD THREADED BOSS IN PLACE AS SHOWN
1" - .058 X 4" TUBE
7/8 - .058 X 2 1/2 TUBE
DETAIL #9 REAR WING STRUT
SCALE: 1/2 SIZE
.265 (17/64) DIA. - 2 HOLES
1 1/2 - .035 STEEL TUBE
WELD ALL AROUND AFTER FLATTENING
1" - .058 X 4" TUBE
7/8 - .058 X 2 1/2 TUBE
SLOT FLATTENED TUBE 3/8 & WELD THREADED BOSS IN PLACE AS SHOWN
DETAIL #10 FRONT WING STRUT
SCALE: 1/2 SIZE
NOTE: CENTER STRUT IDENTICAL IN CONSTRUCTION EXCEPT 1 1/4 - .035 MAIN TUBE & 1" - .058 & 1 1/2 - .058 REINF. USED
HEATH AIRCRAFT CORPORATION
NILES, MICHIGAN
DWG. NO. 302
WING FUEL TANK AND STRUT DETAILS
SCALE: 1/4 & NOTED
DRAWN BY: LANDY 7/27/87
CHECKED BY: C.E.L.
REVISED & REDRAWN: R. LAMBERT 8/31/87

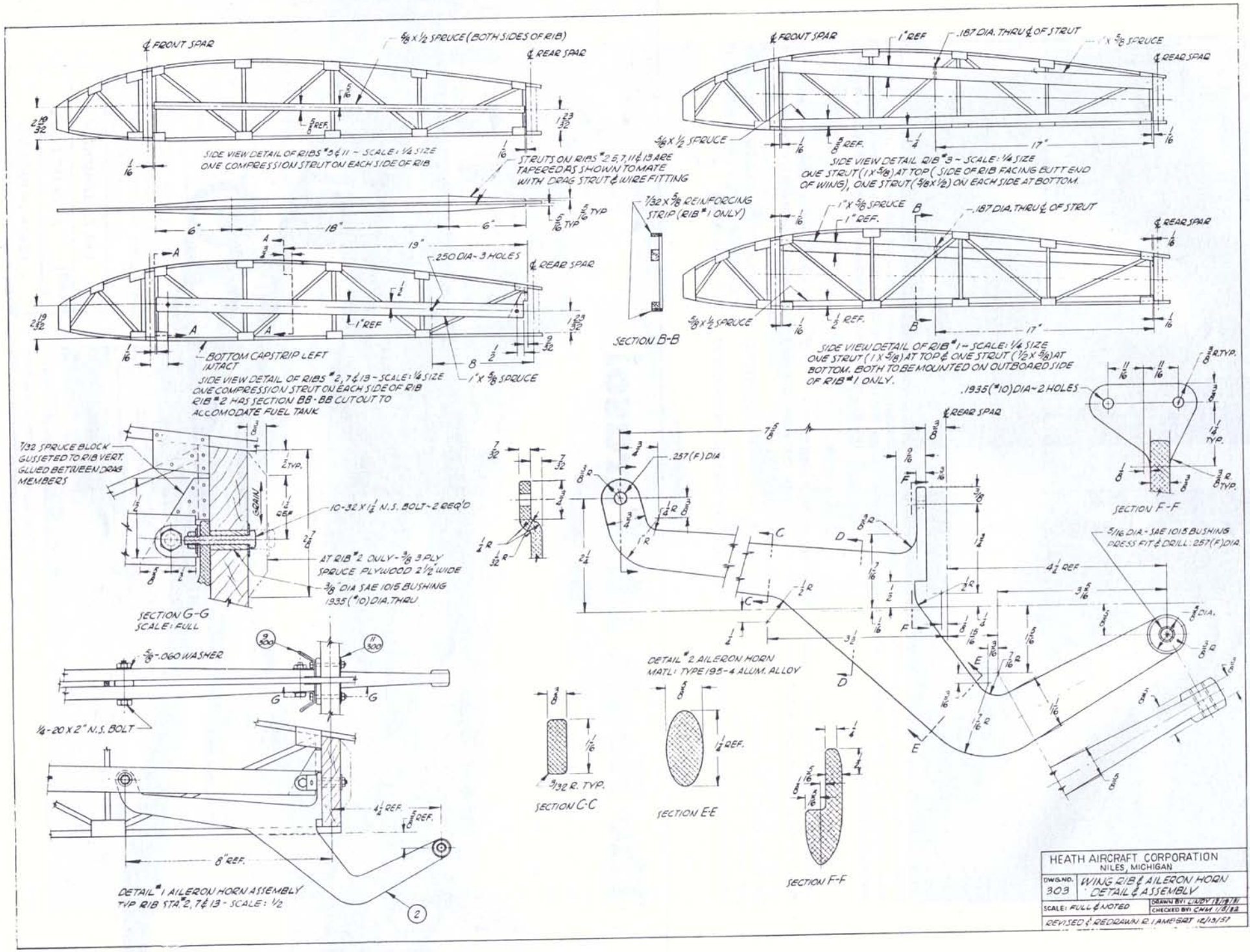
℄ FRONT SPAR
5/8 x 1/2 SPRUCE (BOTH SIDES OF RIB)
℄ REAR SPAR
SIDE VIEW DETAIL OF RIBS #5 & 11 - SCALE: 1/4 SIZE
ONE COMPRESSION STRUT ON EACH SIDE OF RIB
STRUTS ON RIBS #2,5,7,11 & 13 ARE TAPERED AS SHOWN TO MATE WITH DRAG STRUT & WIRE FITTING
5/16 TYP
6"
18"
6"
19"
250 DIA - 3 HOLES
1" REF
BOTTOM CAPSTRIP LEFT INTACT
SIDE VIEW DETAIL OF RIBS #2, 7 & 13 - SCALE: 1/4 SIZE
ONE COMPRESSION STRUT ON EACH SIDE OF RIB
RIB #2 HAS SECTION BB-BB CUT OUT TO ACCOMODATE FUEL TANK
1" x 5/8 SPRUCE
7/32 x 5/8 REINFORCING STRIP (RIB #1 ONLY)
SECTION B-B
1" REF
.187 DIA. THRU ℄ OF STRUT
1" x 5/8 SPRUCE
5/8 x 1/2 SPRUCE
17"
SIDE VIEW DETAIL RIB #3 - SCALE: 1/4 SIZE
ONE STRUT (1 x 5/8) AT TOP (SIDE OF RIB FACING BUTT END OF WING), ONE STRUT (5/8 x 1/2) ON EACH SIDE AT BOTTOM.
SIDE VIEW DETAIL OF RIB #1 - SCALE: 1/4 SIZE
ONE STRUT (1 x 5/8) AT TOP & ONE STRUT (1/2 x 5/8) AT BOTTOM. BOTH TO BE MOUNTED ON OUTBOARD SIDE OF RIB #1 ONLY.
.1935 (#10) DIA - 2 HOLES
SECTION F-F
7/32 SPRUCE BLOCK GUSSETED TO RIB VERT. GLUED BETWEEN DRAG MEMBERS
10-32 x 1 1/2 N.S. BOLT - 2 REQ'D
AT RIB #2 ONLY - 3/8 3 PLY SPRUCE PLYWOOD 2 1/2" WIDE
3/8" DIA SAE 1015 BUSHING 1935 (#10) DIA. THRU
SECTION G-G
SCALE: FULL
.257 (F) DIA
5/16 DIA. - SAE 1015 BUSHING PRESS FIT & DRILL: .257 (F) DIA.
4 1/2 REF
DETAIL #2 AILERON HORN
MATL: TYPE 195-4 ALUM. ALLOY
5/8 - .060 WASHER
1/4 - 20 x 2" N.S. BOLT
8" REF.
DETAIL #1 AILERON HORN ASSEMBLY
TYP RIB STA. #2, 7 & 13 - SCALE: 1/2
SECTION C-C
SECTION E-E
SECTION F-F
HEATH AIRCRAFT CORPORATION
NILES, MICHIGAN
DWG. NO. 303
WING RIB & AILERON HORN DETAIL & ASSEMBLY
SCALE: FULL & NOTED
DRAWN BY: LADY 12/9/31
CHECKED BY: CMM 1/8/32
REVISED & REDRAWN R. LAMBERT 12/13/57

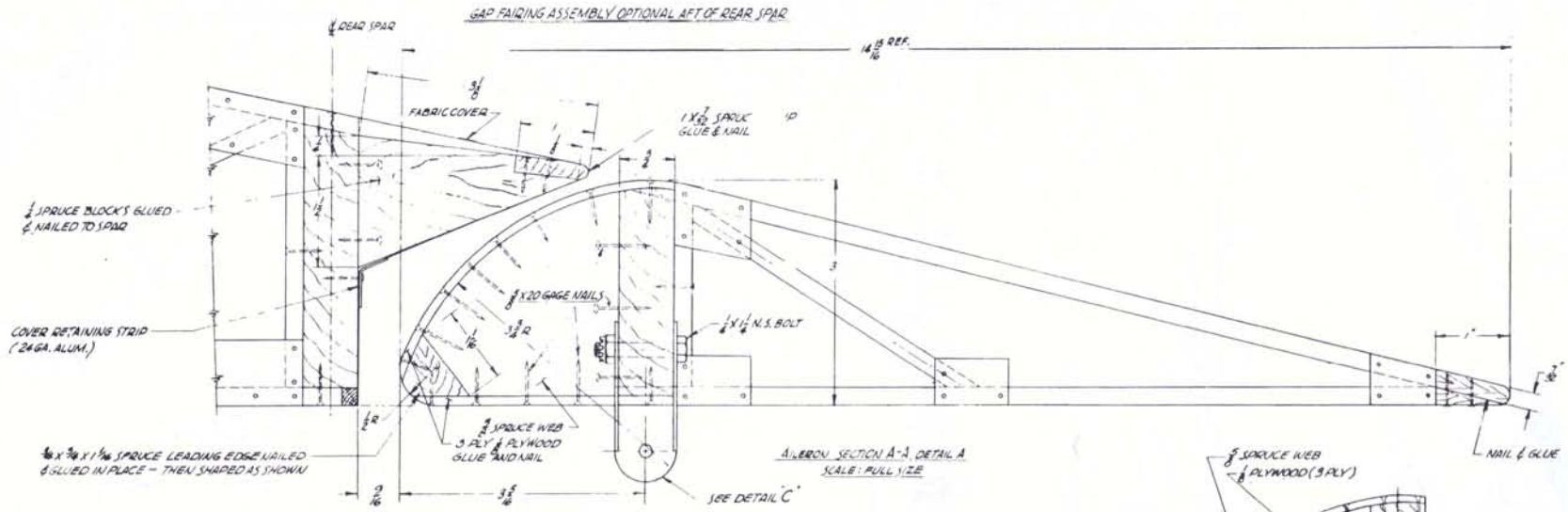

AILERON SECTION A-A, DETAIL A
SCALE: FULL SIZE

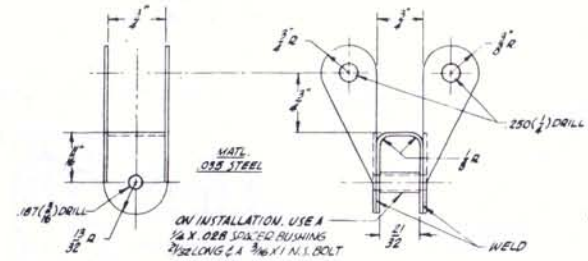

AILERON HINGE FITTING
DETAIL "C" – SCALE: FULL SIZE

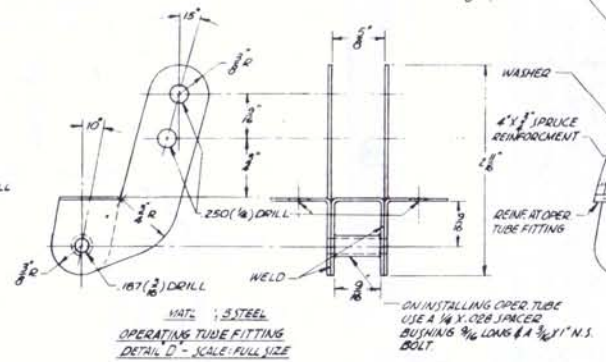

OPERATING TUBE FITTING
DETAIL D – SCALE: FULL SIZE

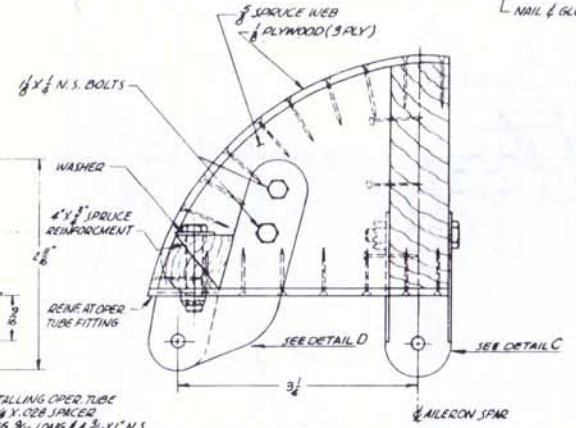

DETAIL "B", SECTION B-B, SCALE: FULL SIZE
OPERATING TUBE FITTING INSTALLATION

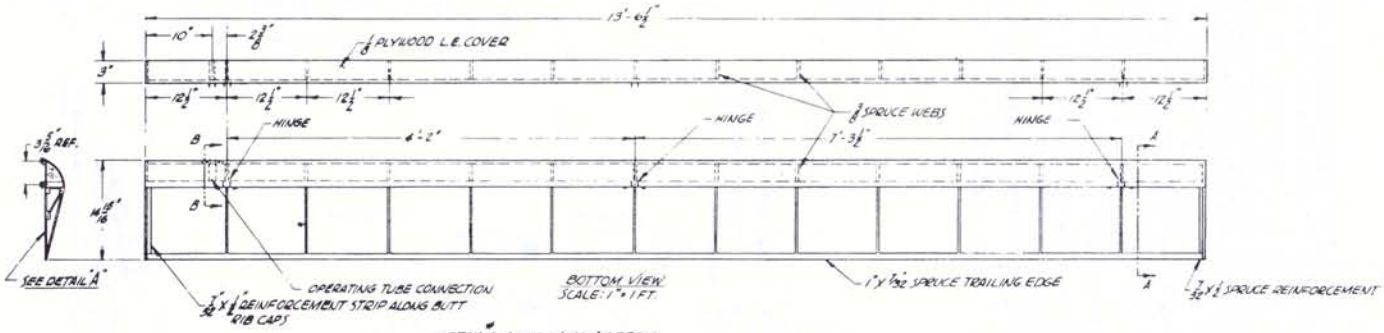

BOTTOM VIEW
SCALE: 1" = 1 FT.

DETAIL 1 LONG WING AILERON
MAKE 1 RH & 1 LH

A	MODIFIED GAP FAIRING	CHM 5-31-52
HEATH AIRCRAFT CORPORATION NILES, MICHIGAN		
DWG. NO. 304	WOOD AILERON DETAILS MODEL LNB-4 & LNA-40	
SCALE: AS INDICATED	DRAWN: GARY CHKD. BHM	1/8/36
REVISED & REDRAWN	R. LAMBERT	12/10/57

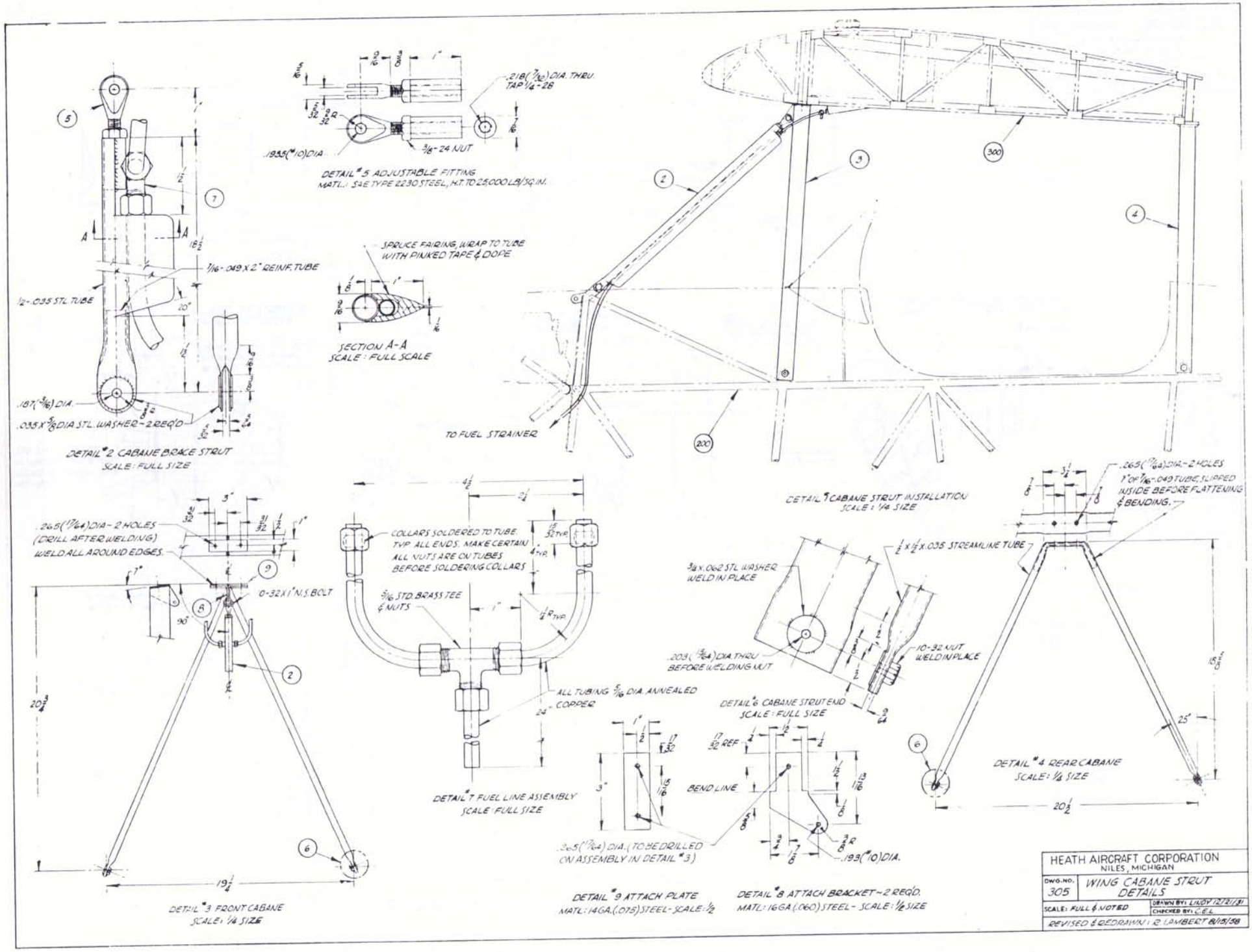
DETAIL #5 ADJUSTABLE FITTING
MATL.: SAE TYPE 2230 STEEL, H.T. TO 25,000 LB/SQ.IN.
.218(7/32) DIA. THRU. TAP 1/4-28
.1935(#10) DIA.
3/16-24 NUT
DETAIL #2 CABANE BRACE STRUT
SCALE: FULL SIZE
1/16-.049 X 2" REINF. TUBE
1/2-.035 STL. TUBE
.187(3/16) DIA.
.035 X 5/8 DIA STL. WASHER-2 REQ'D
SPRUCE FAIRING, WRAP TO TUBE WITH PINKED TAPE & DOPE
SECTION A-A
SCALE: FULL SCALE
TO FUEL STRAINER
DETAIL #1 CABANE STRUT INSTALLATION
SCALE: 1/4 SIZE
.265(17/64) DIA-2 HOLES (DRILL AFTER WELDING) WELD ALL AROUND EDGES.
0-32 X 1" N.S. BOLT
DETAIL #3 FRONT CABANE
SCALE: 1/4 SIZE
COLLARS SOLDERED TO TUBE. TYP. ALL ENDS. MAKE CERTAIN ALL NUTS ARE ON TUBES BEFORE SOLDERING COLLARS
5/16 STD. BRASS TEE & NUTS
ALL TUBING 5/16 DIA. ANNEALED COPPER
DETAIL #7 FUEL LINE ASSEMBLY
SCALE: FULL SIZE
3/4 X .062 STL. WASHER WELD IN PLACE
1/2 X 1/2 X .035 STREAMLINE TUBE
.203(13/64) DIA. THRU BEFORE WELDING NUT
10-32 NUT WELD IN PLACE
DETAIL #6 CABANE STRUT END
SCALE: FULL SIZE
.265(17/64) DIA. (TO BE DRILLED ON ASSEMBLY IN DETAIL #3)
BEND LINE
.193(#10) DIA.
DETAIL #9 ATTACH PLATE
MATL: 14GA.(.075) STEEL-SCALE: 1/2
DETAIL #8 ATTACH BRACKET-2 REQ'D.
MATL: 16GA.(.060) STEEL-SCALE: 1/2 SIZE
.265(17/64) DIA-2 HOLES
1" OF 7/16-.049 TUBE, SLIPPED INSIDE BEFORE FLATTENING & BENDING.
DETAIL #4 REAR CABANE
SCALE: 1/4 SIZE
HEATH AIRCRAFT CORPORATION
NILES, MICHIGAN
DWG. NO. 305
WING CABANE STRUT DETAILS
SCALE: FULL & NOTED
DRAWN BY: LINDY 12/21/31
CHECKED BY: C.E.L.
REVISED & REDRAWN: R. LAMBERT 8/18/58

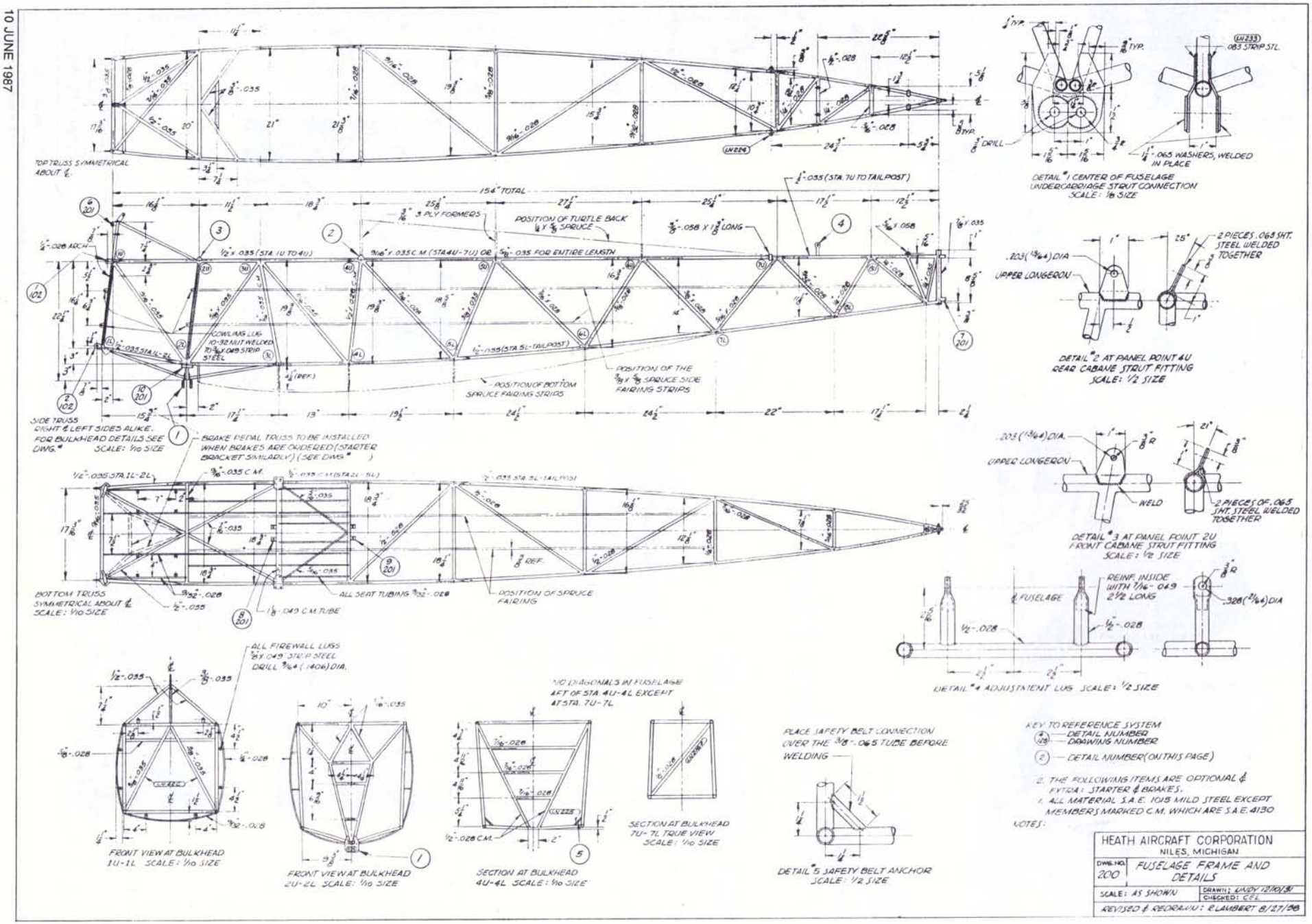
TOP TRUSS SYMMETRICAL ABOUT ℄
154" TOTAL
3 PLY FORMERS
POSITION OF TURTLE BACK 1/8 X 3/8 SPRUCE
1/2" X .035 (STA. 1U TO 4U)
9/16" X .035 C.M. (STA 4U-7U) OR 5/16" - .035 FOR ENTIRE LENGTH
1/2" - .035 (STA. 7U TO TAILPOST)
1/2" - .035 (STA. 5L-TAILPOST)
COWLING LUG 10-32 NUT WELDED TO 3/8 X .049 STRIP STEEL
POSITION OF BOTTOM SPRUCE FAIRING STRIPS
POSITION OF THE 3/8 X 3/8 SPRUCE SIDE FAIRING STRIPS
SIDE TRUSS RIGHT & LEFT SIDES ALIKE. FOR BULKHEAD DETAILS SEE DWG. SCALE: 1/10 SIZE
BRAKE PEDAL TRUSS TO BE INSTALLED WHEN BRAKES ARE ORDERED (STARTER BRACKET SIMILARLY) (SEE DWG.)
BOTTOM TRUSS SYMMETRICAL ABOUT ℄ SCALE: 1/10 SIZE
ALL SEAT TUBING 9/32" - .028
POSITION OF SPRUCE FAIRING
1/8" - .049 C.M. TUBE
ALL FIREWALL LUGS 3/8" X .049 STRIP STEEL DRILL 3/64 (.1406) DIA.
FRONT VIEW AT BULKHEAD 1U-1L SCALE: 1/10 SIZE
FRONT VIEW AT BULKHEAD 2U-2L SCALE: 1/10 SIZE
NO DIAGONALS IN FUSELAGE AFT OF STA. 4U-4L EXCEPT AT STA. 7U-7L
SECTION AT BULKHEAD 4U-4L SCALE: 1/10 SIZE
SECTION AT BULKHEAD 7U-7L TRUE VIEW SCALE: 1/10 SIZE
PLACE SAFETY BELT CONNECTION OVER THE 3/8" - .065 TUBE BEFORE WELDING
DETAIL #5 SAFETY BELT ANCHOR SCALE: 1/2 SIZE
DETAIL #1 CENTER OF FUSELAGE UNDERCARRIAGE STRUT CONNECTION SCALE: 1/8 SIZE
.065 WASHERS, WELDED IN PLACE
.083 STRIP STL.
DETAIL #2 AT PANEL POINT 4U REAR CABANE STRUT FITTING SCALE: 1/2 SIZE
2 PIECES .065 SHT. STEEL WELDED TOGETHER
UPPER LONGERON
DETAIL #3 AT PANEL POINT 2U FRONT CABANE STRUT FITTING SCALE: 1/2 SIZE
WELD
DETAIL #4 ADJUSTMENT LUG SCALE: 1/2 SIZE
REINF. INSIDE WITH 7/16" - .049 2 1/2 LONG
KEY TO REFERENCE SYSTEM
DETAIL NUMBER
DRAWING NUMBER
DETAIL NUMBER (ON THIS PAGE)
2. THE FOLLOWING ITEMS ARE OPTIONAL & EXTRA: STARTER & BRAKES.
1. ALL MATERIAL S.A.E. 1015 MILD STEEL EXCEPT MEMBERS MARKED C.M. WHICH ARE S.A.E. 4130
NOTES:
HEATH AIRCRAFT CORPORATION
NILES, MICHIGAN
DWG. NO. 200
FUSELAGE FRAME AND DETAILS
SCALE: AS SHOWN
DRAWN: LINDY 12/10/31
CHECKED: CEL
REVISED & REDRAWN: R. LAMBERT 8/27/98