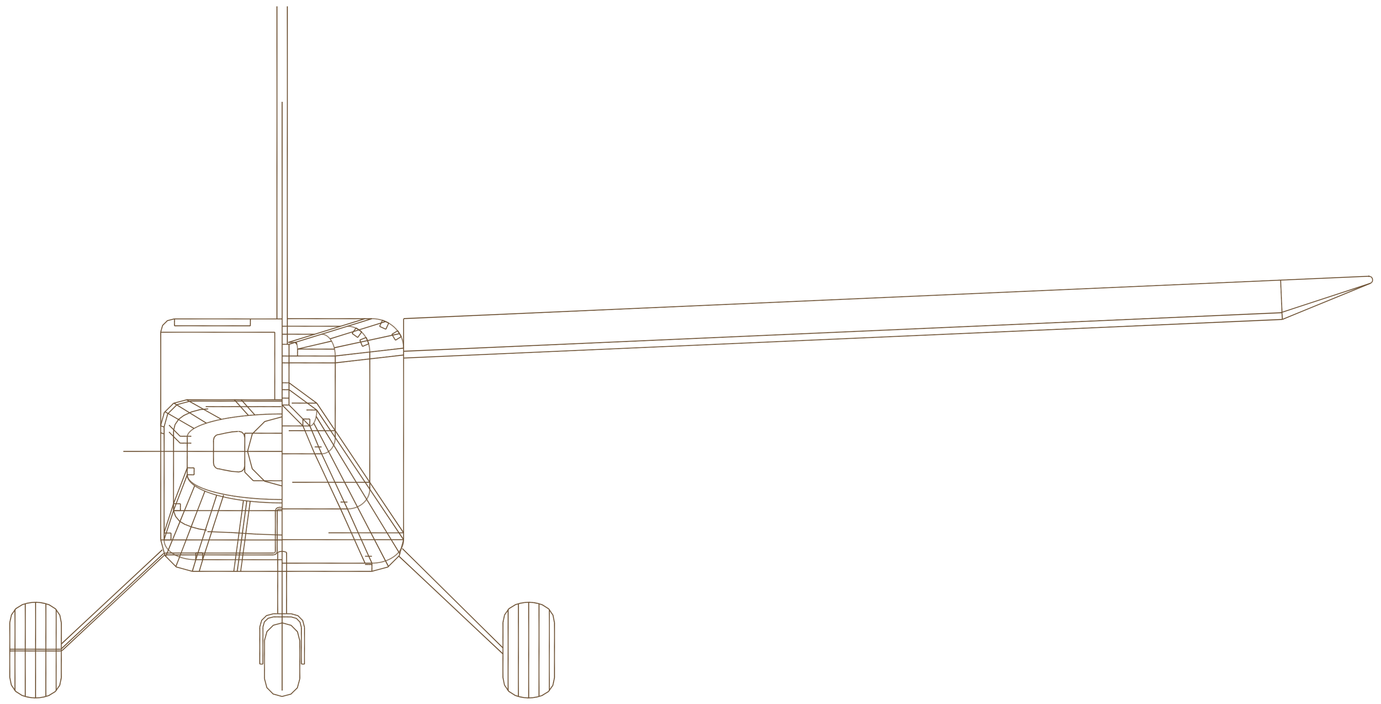

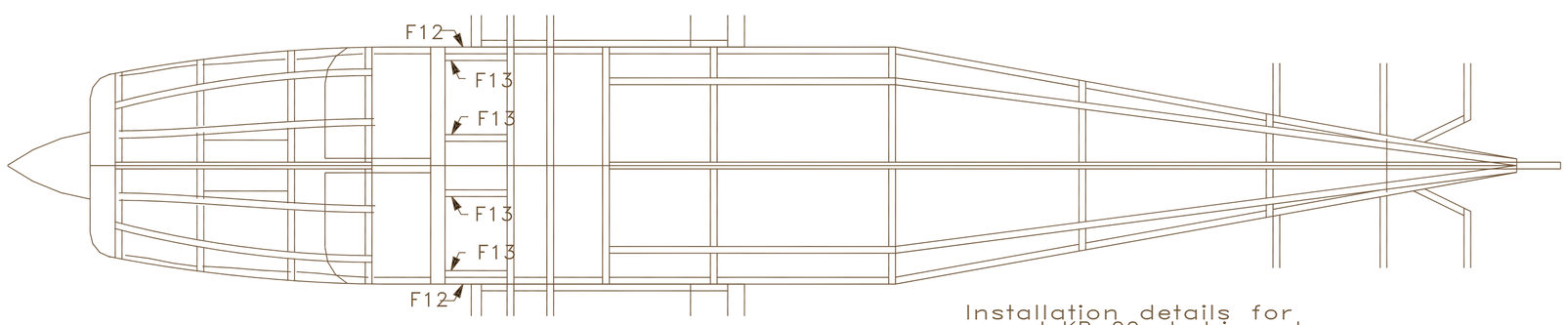

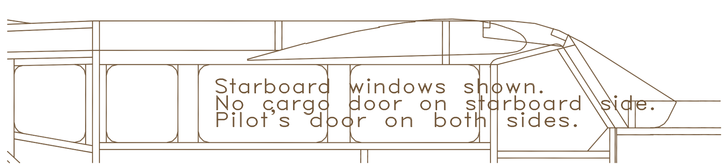

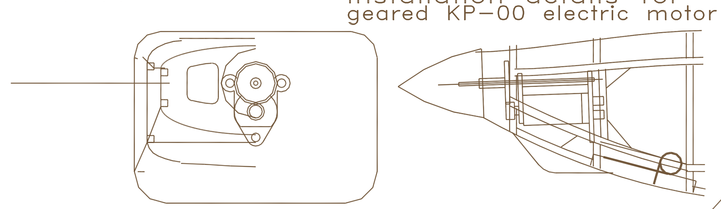

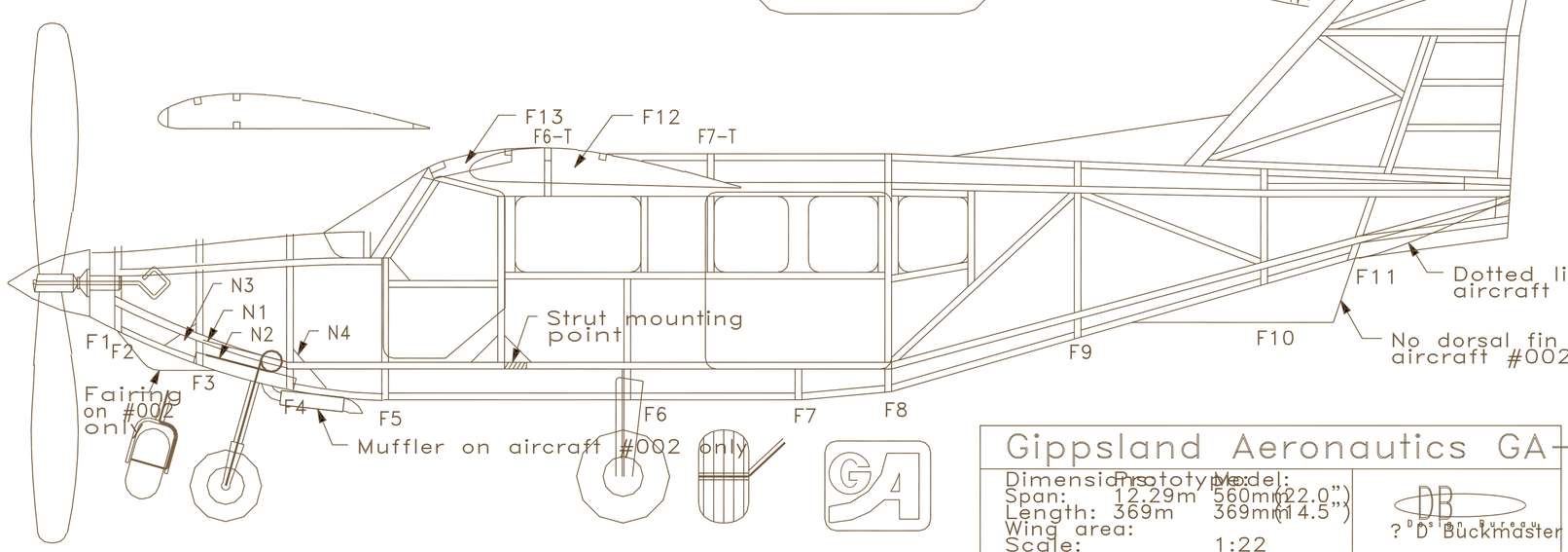

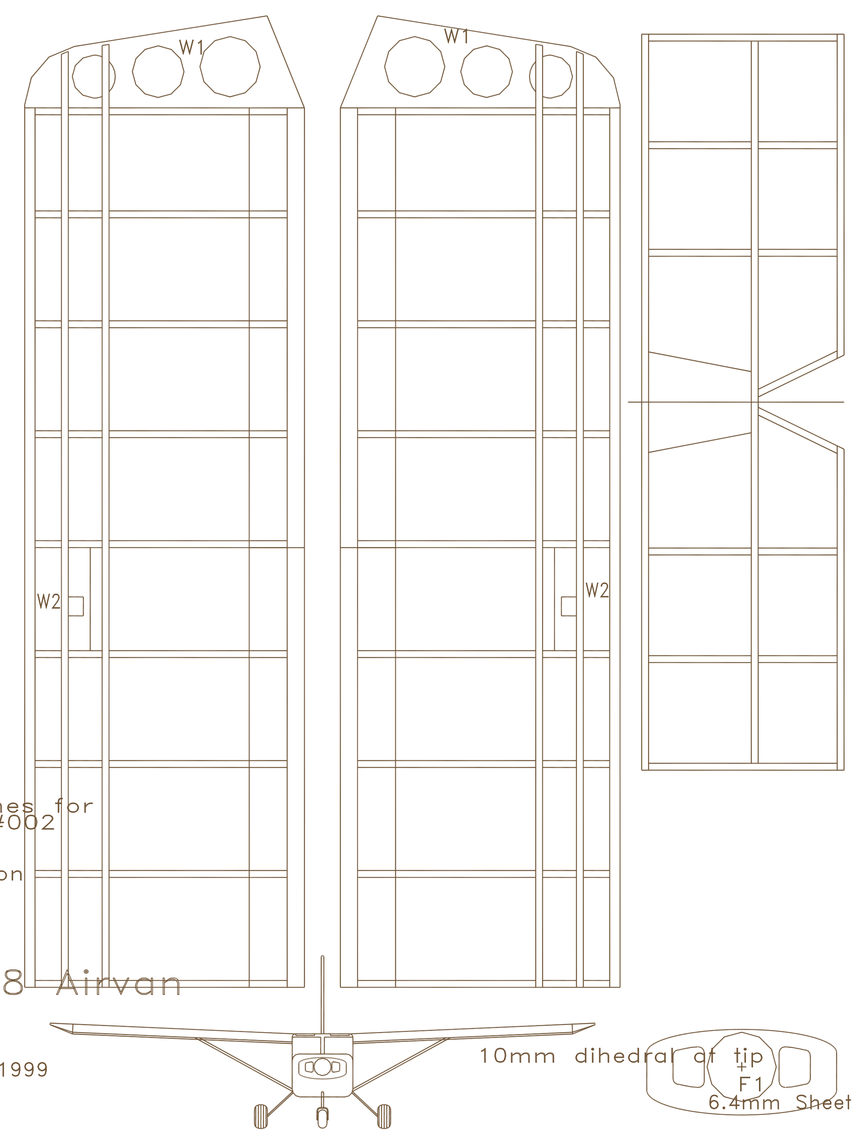

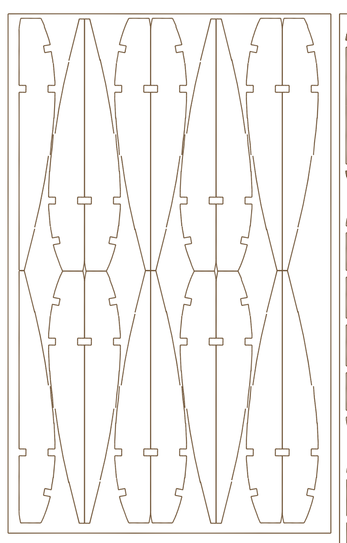

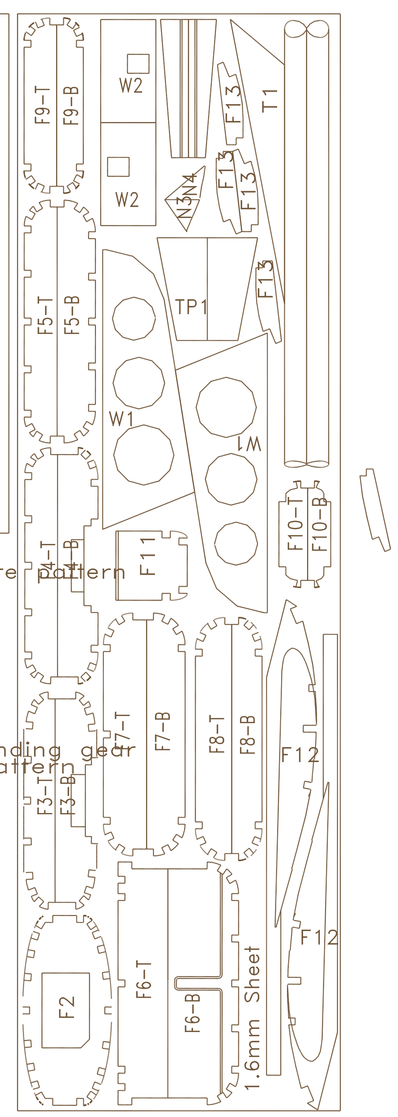

Nose landing gear wire pattern

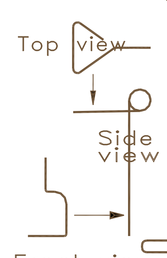

Main landing gear wire pattern

3.2mm Sheet

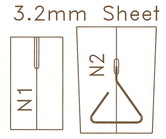

Inches

Centimetres

Gippsland Aeronautics GA-8 Airvan

Dimensions: Prototype Model:
Span: 12.29m 560mm (22.0")
Length: 369m 369mm (14.5")
Wing area:
Scale: 1:22
Model designed by Derek
June 1999

? D' Buckmaster 1999