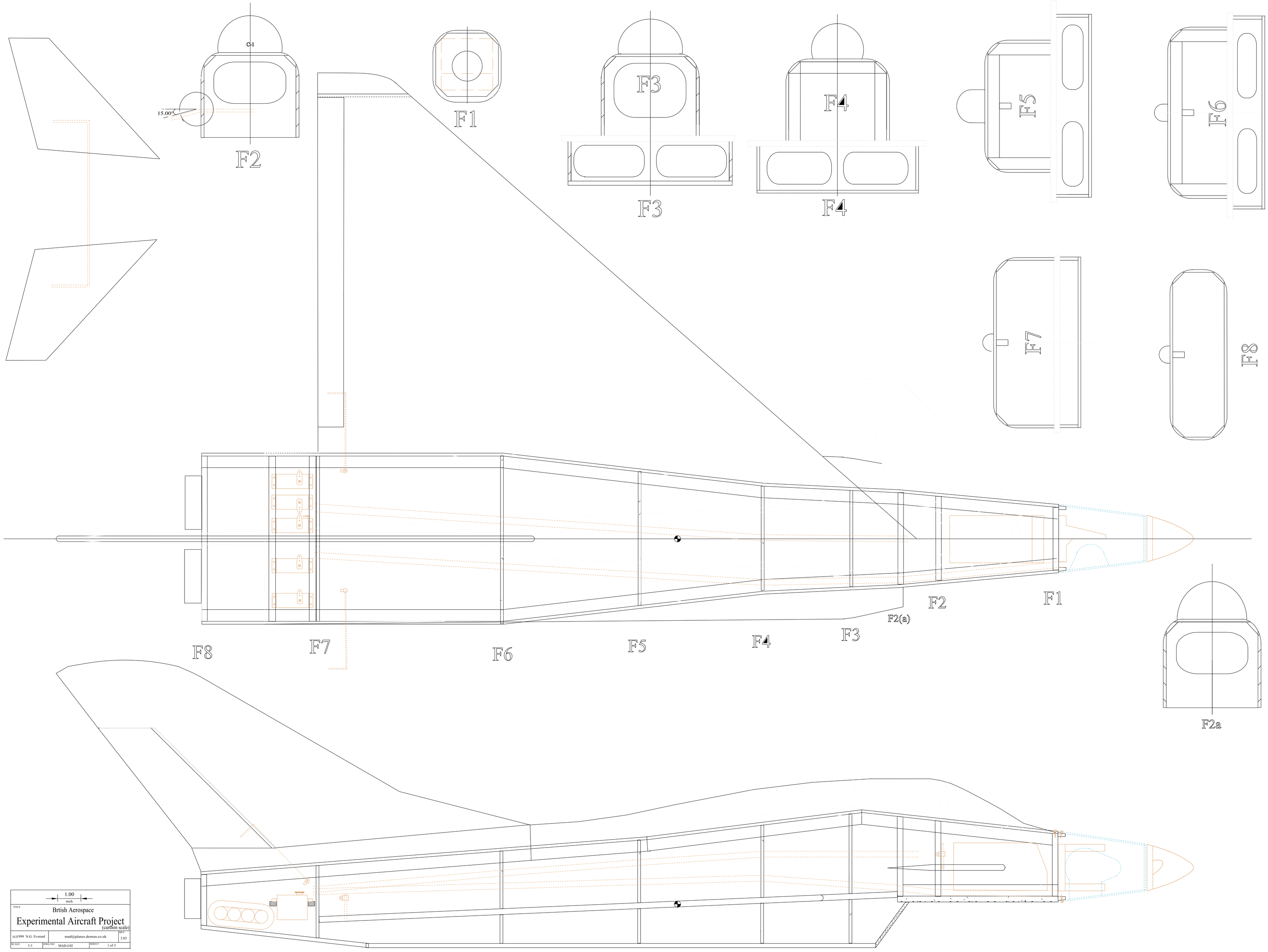

1.00 inch

TITLE

Brtish Aerospace

Experimental Aircraft Project

(cartoon scale)

(c)1999 N.G. Everard

mad@planes.demon.co.uk

REV 2.03

SCALE 1:1 | DWG NO MAD-J-02 | SHEET 1 of 3