Deperdussin TT
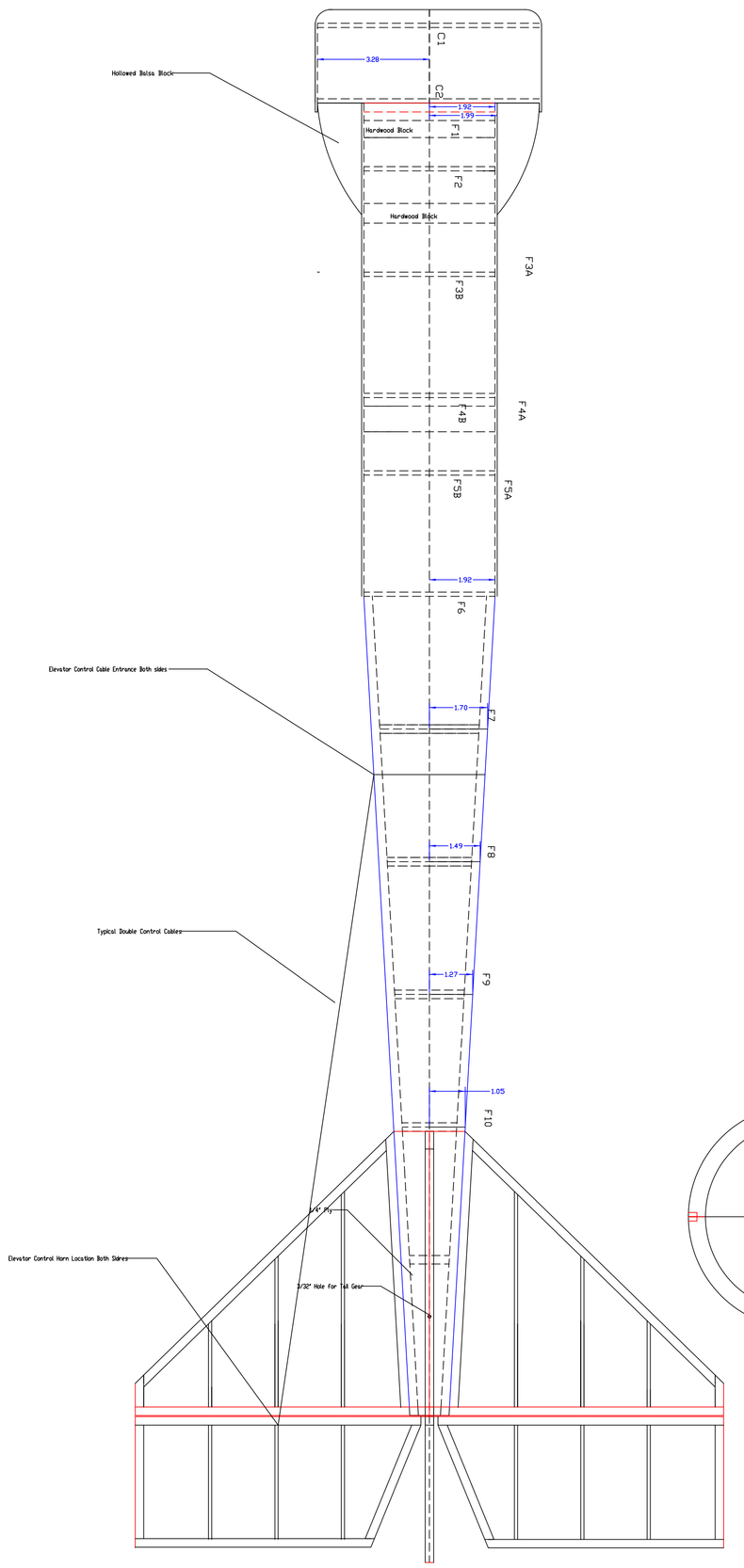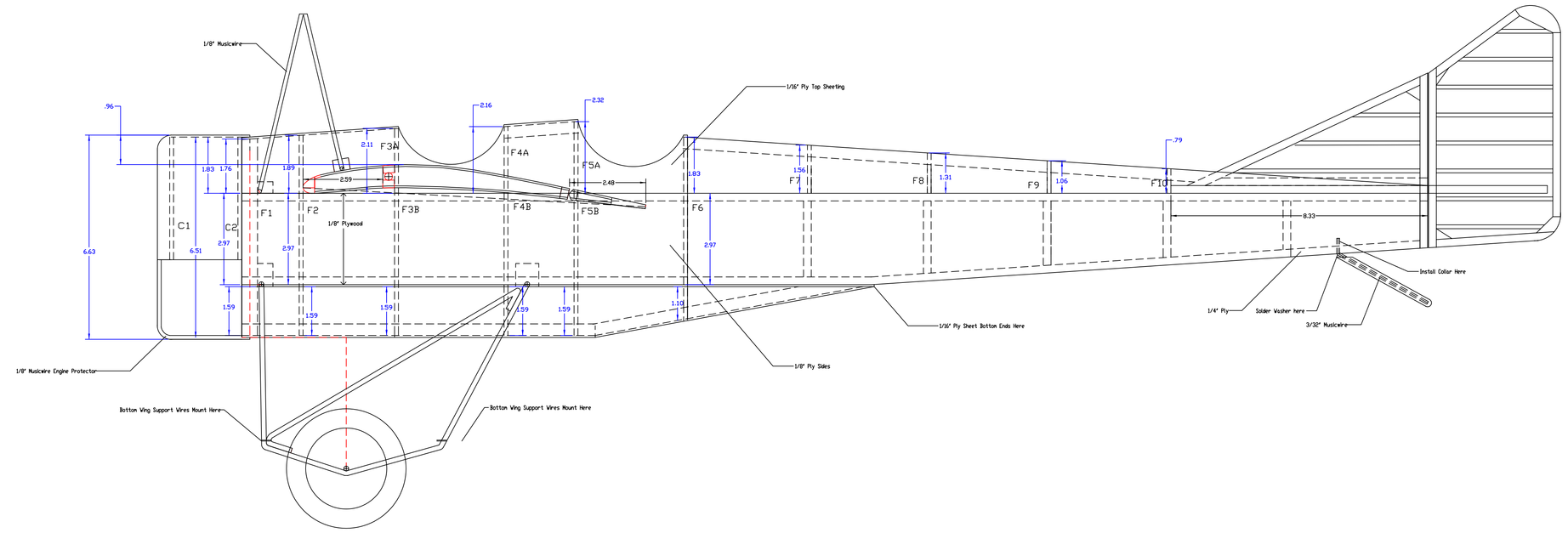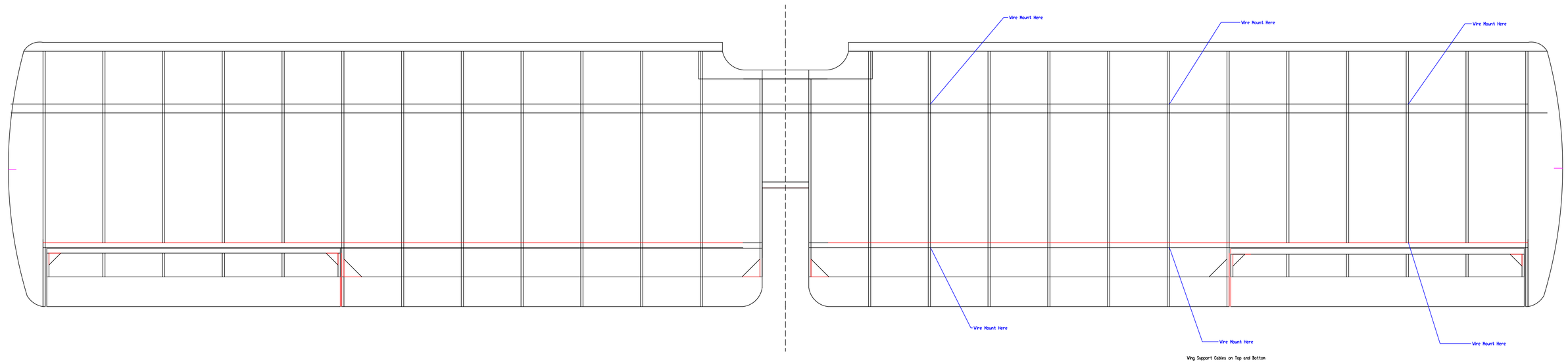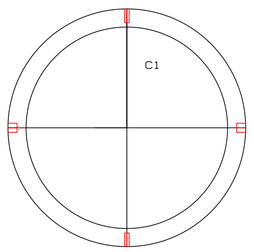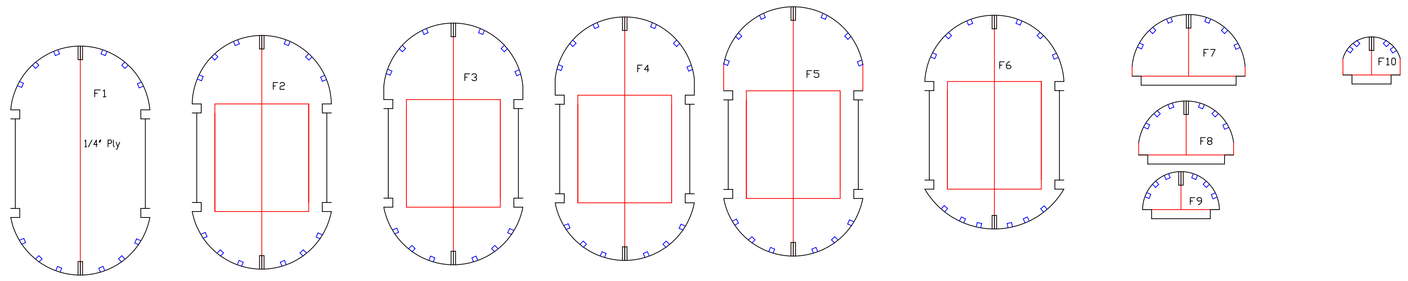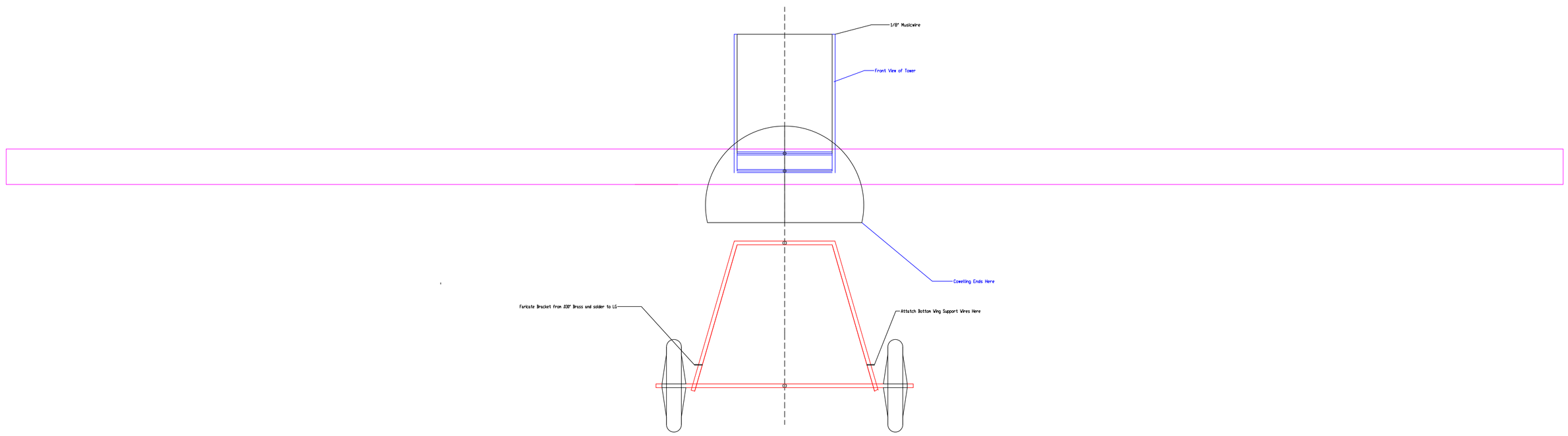
65" Wingspan